FOR BURIED UTILITY INFORMATION
THREE (3) BUSINESS DAYS
BEFORE YOU DIG
CALL 811
(or 1-800-922-1987)
UTILITY NOTIFICATION
CENTER OF COLORADO (UNCC)
www.uncc.org

CENTENNIAL BOULEVARD RECONSTUCTION

GARDEN OF THE GODS RD TO FILLMORE ST

COLORADO SPRINGS, COLORADO

APPENDIX A: STANDARD PLANS
MAY 2016

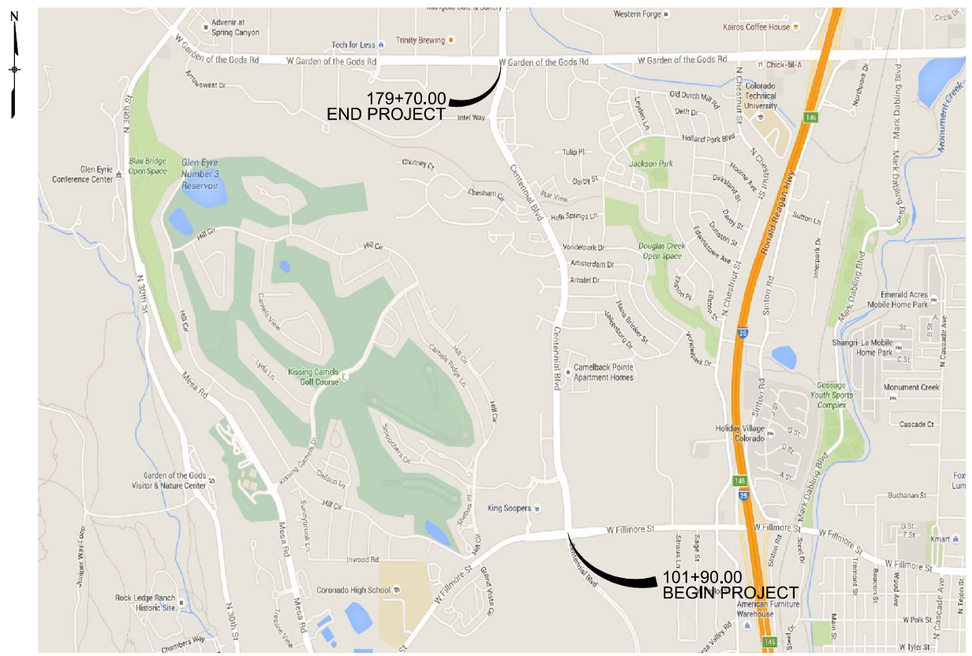

LOCATION MAP
NTS

ACCEPTANCE BY THE CITY OF COLORADO SPRINGS OF DESIGN WORK BY DESIGN PROFESSIONALS CONSTITUTES BELIEF THAT THE WORK HAS BEEN DONE IN ACCORDANCE WITH THE CITY STANDARDS AND ORDINANCES. WORK PRODUCTS ARE THE RESPONSIBILITY OF THE DESIGN PROFESSIONAL AND CITY ACCEPTANCE DOES NOT RELIEVE THE PROFESSIONAL OF SAID RESPONSIBILITY.

FOR INFORMATION ONLY

COMPUTER FILE INFORMATION	
Creation Date: 07/28/15	Initials: SP
Last Modification Date: 5/1/2016	Initials: SP
Drawing File Name: Std Plans-Title Sheet	
MicroStation Ver. 08.11.07	Scale: 1:100
DESIGNED BY: MAK DRAWN BY: SP	CHECKED BY: DJE

REVISIONS		
No.	Description	Date

STATEMENT:
THE CITY OF COLORADO SPRINGS RECOGNIZES THE DESIGN ENGINEER AS HAVING RESPONSIBILITY FOR THE DESIGN. THE CITY HAS LIMITED ITS SCOPE OF REVIEW ACCORDINGLY.

WILSON & COMPANY
5755 Mark Dabling Blvd, Suite 220
Colorado Springs, CO 80919
719.520.5800

CENTENNIAL BLVD RECONSTRUCTION
City of Colorado Springs and PPRTA Contract T007780

APPENDIX A - TITLE SHEET

Subset: Appendix A	Subset Sheets: 1 of 118	Sheet No: 1

makochis 4:22:50 PM pw:\\ABQPWINT01.wilsonco.com:Wilson_Projects\Documents\8100-TRN\City of Colorado Springs\15-100-044-00_Cent. Blvd Reconst GOG to Fill\00000\Miscellaneous\Standard Plans\Std Plans-Title Sheet

FOR BURIED UTILITY INFORMATION
THREE (3) BUSINESS DAYS BEFORE YOU DIG
CALL 811
(or 1-800-922-1987)
UTILITY NOTIFICATION CENTER OF COLORADO (UNCC)
www.uncc.org

ALL OF THE M&S STANDARD PLANS, AS SUPPLEMENTED AND REVISED, APPLY TO THIS PROJECT WHEN USED BY DESIGNATED PAY ITEM OR SUBSIDIARY ITEM.

CURRENT, NEW OR REVISED STANDARD PLAN SHEETS APPLICABLE TO THIS PROJECT ARE INDICATED BY A MARKED BOX ■.

CITY OF COLORADO SPRINGS STANDARD PLANS

M STANDARD

PLAN NUMBER	NEW OR REVISED	M STANDARD TITLE	PAGE NUMBER
■	M-100-1	STANDARD SYMBOLS (3 SHEETS)	1-3
■	M-100-2	ACRONYMS AND ABBREVIATIONS (4 SHEETS)	4-7
□	M-203-1	□ APPROACH ROADS (REVISED ON JULY 8, 2013)	~~8~~
□	M-203-2	DITCH TYPES	9
□	M-203-11	SUPERELEVATION CROWNED AND DIVIDED HIGHWAYS (3 SHEETS)	10-12
□	M-203-12	SUPERELEVATION STREETS (2 SHEETS)	13-14
■	M-206-1	EXCAVATION AND BACKFILL FOR STRUCTURES (2 SHEETS)	15-16
□	M-206-2	EXCAVATION AND BACKFILL FOR BRIDGES (2 SHEETS)	17-18
□	M-208-1	■ TEMPORARY EROSION CONTROL (11 SHEETS) (REVISED ON MARCH 29, 2016)	~~19-30~~
□	M-210-1	MAILBOX SUPPORTS (2 SHEETS)	31-32
■	M-214-1	PLANTING DETAILS	33
	M-216-1	□ SOIL RETENTION COVERING (2 SHEETS) (NEW ON JULY 16, 2015)	
□	M-412-1	■ CONCRETE PAVEMENT JOINTS (5 SHEETS) (REVISED ON JULY 24, 2012)	~~34-38~~
□	M-510-1	STRUCTURAL PLATE PIPE H-20 LOADING	39
□	M-601-1	□ SINGLE CONCRETE BOX CULVERT (2 SHEETS) (REVISED ON NOVEMBER 25, 2015)	~~40-41~~
□	M-601-2	□ DOUBLE CONCRETE BOX CULVERT (2 SHEETS) (REVISED ON NOVEMBER 25, 2015)	~~42-43~~
□	M-601-3	□ TRIPLE CONCRETE BOX CULVERT (2 SHEETS) (REVISED ON NOVEMBER 25, 2015)	~~44-45~~
□	M-601-10	HEADWALL FOR PIPES	46
□	M-601-11	TYPE "S" SADDLE HEADWALLS FOR PIPE	47
□	M-601-12	HEADWALLS AND PIPE OUTLET PAVING	48
□	M-601-20	WINGWALLS FOR PIPE OR BOX CULVERTS	49
□	M-603-1	□ METAL PIPE (4 SHEETS) (REVISED ON OCTOBER 2, 2014)	~~50-53~~
□	M-603-2	□ REINFORCED CONCRETE PIPE (REVISED ON OCTOBER 2, 2014)	~~54~~
□	M-603-3	PRECAST CONCRETE BOX CULVERT	55
□	M-603-4	□ CORRUGATED POLYETHYLENE PIPE (AASHTO M294) (REVISED ON JULY 24, 2012)	~~56~~
□	M-603-5	□ POLYVINYL CHLORIDE (PVC) PIPE (AASHTO M304) (REVISED ON JULY 24, 2012)	~~57~~
	M-603-6	□ STEEL REINFORCED POLYETHYLENE RIBBED PIPE (AASHTO MP 20) (NEW ON APRIL 30, 2015)	
□	M-603-10	CONCRETE AND METAL END SECTIONS (2 SHEETS)	58-59
□	M-604-10	INLET, TYPE C	60
□	M-604-11	INLET, TYPE D	61
■	M-604-12	CURB INLET TYPE R (2 SHEETS)	62-63
□	M-604-13	CONCRETE INLET TYPE 13	64
□	M-604-20	MANHOLES (3 SHEETS)	65-67
□	M-604-25	VANE GRATE INLET (5 SHEETS)	68-72
■	M-605-1	SUBSURFACE DRAINS	73
□	M-606-1	□ GUARDRAIL TYPE 3 W-BEAM (19 SHEETS) (REVISED ON OCTOBER 27, 2014)	~~74-92~~
	M-606-1	■ MIDWEST GUARDRAIL SYSTEM (MGS) TYPE 3 W-BEAM 31 INCHES (20 SHEETS) (REVISED ON DECEMBER 29, 2015)	
□	M-606-13	□ GUARDRAIL TYPE 7 F-SHAPE BARRIER (4 SHEETS) (REVISED ON AUGUST 30, 2013)	~~93-96~~
□	M-606-14	PRECAST TYPE 7 CONCRETE BARRIER (3 SHEETS)	97-99
□	M-607-1	WIRE FENCES AND GATES (3 SHEETS)	100-102
□	M-607-2	CHAIN LINK FENCE (3 SHEETS)	103-105
□	M-607-3	BARRIER FENCE	106
□	M-607-4	□ DEER FENCE, GATES, AND GAME RAMPS (5 SHEETS) (REVISED ON APRIL 30, 2015)	~~107-109~~
□	M-607-10	PICKET SNOW FENCE	110
□	M-607-15	ROAD CLOSURE GATE (9 SHEETS)	111-119
□	M-608-1	■ CURB RAMPS (7 SHEETS) (REVISED ON JUNE 16, 2014)	~~120-125~~
□	M-609-1	■ CURBS, GUTTERS, AND SIDEWALKS (4 SHEETS) (REVISED ON JULY 24, 2012)	~~126-129~~
□	M-611-1	CATTLE GUARD (2 SHEETS)	130-131
	M-611-2	□ DEER GUARD (2 SHEETS) (NEW ON APRIL 30, 2015)	
□	M-613-1	ROADWAY LIGHTING (4 SHEETS)	132-135
□	M-614-1	RUMBLE STRIPS (3 SHEETS)	136-138
□	M-614-2	SAND BARREL ARRAYS (2 SHEETS)	139-140
□	M-615-1	EMBANKMENT PROTECTOR TYPE 3	141
□	M-615-2	EMBANKMENT PROTECTOR TYPE 5	142
□	M-616-1	INVERTED SIPHON	143
□	M-620-1	FIELD LABORATORY CLASS 1	144
■	M-620-2	FIELD LABORATORY CLASS 2 (2 SHEETS)	145-146
□	M-620-11	FIELD OFFICE CLASS 1	147
■	M-620-12	FIELD OFFICE CLASS 2	148
□	M-629-1	□ SURVEY MONUMENTS (2 SHEETS)	149-150

S STANDARD

PLAN NUMBER	NEW OR REVISED	S STANDARD TITLE	PAGE NUMBER
□	S-612-1	DELINEATOR INSTALLATIONS (7 SHEETS)	151-157
□	S-614-1	□ GROUND SIGN PLACEMENT (2 SHEETS) (REVISED ON DECEMBER 12, 2014)	~~158-159~~
□	S-614-2	CLASS I SIGNS	160
□	S-614-3	CLASS II SIGNS	161
□	S-614-4	□ CLASS III SIGNS (3 SHEETS) (REVISED ON DECEMBER 17, 2014)	~~162-164~~
□	S-614-5	BREAK-AWAY SIGN SUPPORT DETAILS FOR GROUND SIGNS (2 SHEETS)	165-166
□	S-614-6	□ CONCRETE FOOTINGS AND SIGN ISLANDS FOR CLASS III SIGNS (2 SHEETS) (REVISED ON SEPTEMBER 16, 2013)	~~167-168~~
□	S-614-8	□ TUBULAR STEEL SIGN SUPPORT DETAILS (6 SHEETS) (REVISED ON OCTOBER 23, 2014)	~~169-173~~
□	S-614-9	PEDESTRIAN PUSH BUTTON POST ASSEMBLY	174
□	S-614-10	MARKER ASSEMBLY INSTALLATIONS	175
□	S-614-11	MILEPOST SIGN DETAIL FOR HIGH SNOW AREAS	176
□	S-614-12	STRUCTURE NUMBER INSTALLATION	177
□	S-614-14	FLASHING BEACON AND SIGN INSTALLATIONS (3 SHEETS)	178-180
□	S-614-20	TYPICAL POLE MOUNT SIGN INSTALLATIONS	181
□	S-614-21	CONCRETE BARRIER SIGN POST INSTALLATIONS	182
□	S-614-22	TYPICAL MULTI-SIGN INSTALLATIONS	183
□	S-614-40	□ TYPICAL TRAFFIC SIGNAL INSTALLATION DETAILS (5 SHEETS) (REVISED ON APRIL 2, 2015)	~~184-188~~
□	S-614-40A	□ ALTERNATIVE TRAFFIC SIGNAL INSTALLATION DETAILS (4 SHEETS) (REVISED ON APRIL 2, 2015)	~~189-192~~
□	S-614-41	□ TEMPORARY SPAN WIRE SIGNALS (REVISED ON APRIL 2, 2015)	~~193~~
□	S-614-42	CABINET FOUNDATION DETAIL (4 SHEETS)	194-197
□	S-614-43	TRAFFIC LOOP AND MISCELLANEOUS SIGNAL DETAILS (10 SHEETS)	198-207
	S-614-44	□ PEDESTAL POLE SIGNALS (2 SHEETS) (NEW ON NOVEMBER 3, 2014)	
□	S-614-50	□ STATIC SIGN MONOTUBE STRUCTURES (12 SHEETS) (REVISED ON NOVEMBER 28, 2012)	~~208-219~~
□	S-614-60	□ DYNAMIC SIGN MONOTUBE STRUCTURES (14 SHEETS) (REVISED ON NOVEMBER 28, 2012)	~~220-233~~
□	S-627-1	□ PAVEMENT MARKINGS (5 SHEETS) (REVISED ON JUNE 10, 2014)	~~234-238~~
□	S-630-1	■ TRAFFIC CONTROLS FOR HIGHWAY CONSTRUCTION (24 SHEETS) (REVISED ON DECEMBER 8, 2014)	~~239-258~~
■	S-630-2	BARRICADES, DRUMS, CONCRETE BARRIERS (TEMP) AND VERTICAL PANELS	259
□	S-630-3	FLASHING BEACON (PORTABLE) DETAILS	260
□	S-630-4	STEEL SIGN SUPPORT (TEMPORARY) INSTALLATION DETAILS (2 SHEETS)	261-262
□	S-630-5	□ PORTABLE RUMBLE STRIPS (TEMPORARY) (2 SHEETS) (REVISED ON AUGUST 13, 2015)	~~263-264~~
□	S-630-6	EMERGENCY PULL-OFF AREA (TEMPORARY)	265
□	S-630-7	ROLLING ROADBLOCKS FOR TRAFFIC CONTROL (3 SHEETS)	266-268

STANDARD PLAN

PLAN NUMBER	STANDARD PLAN TITLE
□ D-1	TYPICAL STREET SECTION
□ D-2	STANDARD STREET SECTION
□ D-3	PAVEMENT REPLACEMENT FOR TYPICAL STREETS
□ D-4	PAVEMENT REPLACEMENT FOR NEW OR RECENTLY OVERLAYED STREETS
□ D-5A	PAVEMENT REPLACEMENT FOR EXISTING CONCRETE SUBSURFACE STREETS
□ D-5B	PAVEMENT REPLACEMENT FOR FLOWABLE FILL
■ D-6	STANDARD CURB & GUTTER TYPE 1, 2, 3, 4, 5 & 6
■ D-7	CROSS PAN
■ D-8A,B,C	PEDESTRIAN CURB RAMP DETAILS
■ D-8D,E,F	PEDESTRIAN RAMP LAYOUT FOR INTERSECTIONS
□ D-8G	PEDESTRIAN CROSSING DETAILS FOR MEDIANS & ISLANDS
■ D-8H,I,J,K	ALTERNATE PEDESTRIAN RAMP DETAILS
□ D-8L	SIDEWALK PASSING SPACE
□ D-8M	SIDEWALK PEDESTRIAN CLEARANCE ZONES
□ D-9	GRATED INLET
□ D-10-R	STANDARD CURB INLET (3 SHEETS)
□ D-11A,B	STANDARD RADIAL CATCH BASIN
□ D-12	RIPRAP CHANNEL DETAIL
□ D-13	WEEP HOLE DETAIL
□ D-14	CONCRETE CHANNEL DETAIL
□ D-15	EXPANSION JOINT DETAIL FOR CONCRETE LINED CHANNEL
■ D-16A,B,C	STANDARD DRIVEWAY DETAILS
■ D-17A,B	STORM SEWER GRATE, LID AND FRAME
■ D-18A	SIDEWALK TAPER SECTION AT MAILBOX
■ D-18B,C	TREE ROOT PROTECTION AND CUTS
□ D-19A,B	* SPECIAL DESIGN CURB INLET TYPE R
□ D-20A,B,C,D	STORM SEWER MANHOLES
□ D-21A,B	CURB OPENING (DRAINAGE CHASE SECTION)
□ D-22	WATER SERVICE RELOCATION
□ D-23A,B	SEWER SERVICE RELOCATION
□ D-24	PATTERNED CONCRETE MEDIAN PAVING
■ D-25A,B,C	CONCRETE PAVEMENT - STANDARD JOINT LAYOUT
□ D-26	METAL CULVERT PIPE
□ D-27	STRUCTURAL PLATE CULVERT PIPE
□ D-28	CONCRETE AND METAL END SECTIONS
□ D-29	HEADWALL FOR PIPE CULVERTS
□ D-30,31	TRENCH BEDDING CLASSIFICATION
□ D-32	TRENCH BEDDING FOR FLEXIBLE PIPE
□ D-33	SINGLE CONCRETE BOX CULVERT
□ D-34	DOUBLE CONCRETE BOX CULVERT
□ D-35	TRIPLE CONCRETE BOX CULVERT
□ D-36	WINGWALLS FOR PIPE OR BOX CULVERTS
■ D-37A,B,C,D	TYPICAL BUS BENCH PLACEMENT
■ D-##	TYPICAL HANDRAIL

* NOT TO BE USED UNLESS PRIOR APPROVAL IS OBTAINED FROM THE CITY ENGINEER ON A SITE BY SITE BASIS.

COLORADO
DEPARTMENT OF TRANSPORTATION
M&S STANDARDS PLANS LIST
July 04, 2012
Revised on Dec. 29, 2015

FOR INFORMATION ONLY

COMPUTER FILE INFORMATION	
Creation Date: 03/23/16	Initials: NAB
Last Modification Date: 4/28/2016	Initials: NAB
Drawing File Name: SP-CDOT and COS Standard Plans List	
MicroStation Ver. 08.11.07	Scale: 1:1
DESIGNED BY: MAK DRAWN BY: SP	CHECKED BY: DJE

REVISIONS

No.	Description	Date

STATEMENT:
THE CITY OF COLORADO SPRINGS RECOGNIZES THE DESIGN ENGINEER AS HAVING RESPONSIBILITY FOR THE DESIGN. THE CITY HAS LIMITED ITS SCOPE OF REVIEW ACCORDINGLY.

WILSON & COMPANY
5755 Mark Dabling Blvd, Suite 220
Colorado Springs, CO 80919
719.520.5800

PPRTA

CENTENNIAL BLVD RECONSTRUCTION
City of Colorado Springs and PPRTA Contract T007780

APPENDIX A: STANDARD PLANS LIST

JALOEPP 10:58:03 AM pw:\\ABQPWINT01.wilsonco.com:Wilson_Projects\Documents\8100-TRN\City of Colorado Springs\15-100-044-00_Cent. Blvd Reconst GOG to Fill\00000\Miscellaneous\Standard Plans\SP-CDOT and COS Standard Plans List

LEGEND

- TOPSOIL
- OVERBURDEN
- CLAY
- SILT
- SAND
- GRAVEL
- SHALE
- LIMESTONE
- SANDSTONE
- SOLID ROCK (IGNEOUS)
- SOLID ROCK (METAMORPHIC)
- COAL

COMPOSITE MATERIALS ARE REPRESENTED BY COMBINATIONS OF THE ABOVE SYMBOLS, SUCH AS:

- SANDY CLAY

TEST HOLES

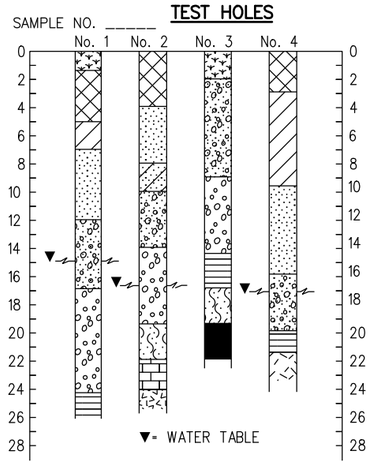

TYPICAL BORING LOG

- TERRAIN SINGLE SHOTS
- TOP OF CUT
- TOE OF FILL

TERRAIN

- GRAVEL ROAD OR DRIVEWAY
- INTERNATIONAL SYMBOL OF ACCESS
- SIDEWALK WITH RAMP
- EDGE OF PAVEMENT
- CENTERLINE OF DIRT ROAD

ROADWAY

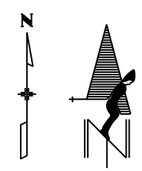

NORTH ARROW

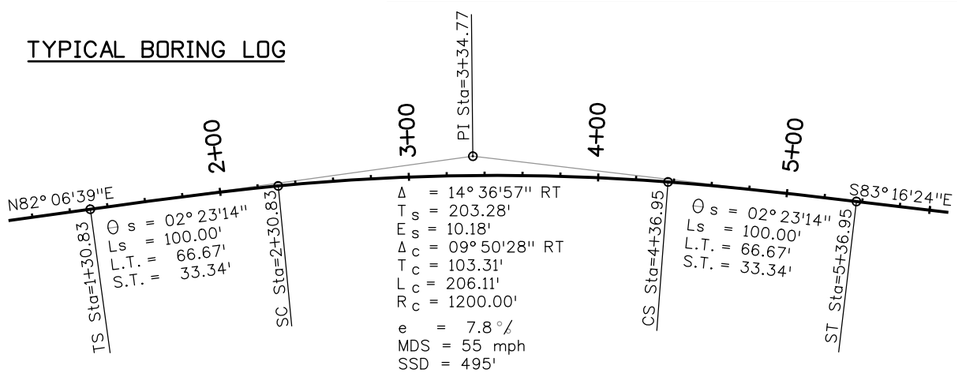

TYPICAL HORIZONTAL CURVE

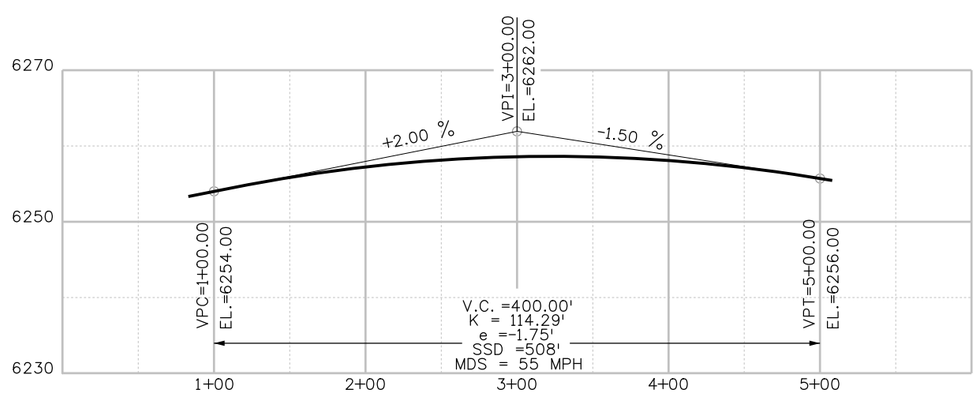

TYPICAL VERTICAL CURVE

- SECTION CORNER
- QUARTER, SIXTEENTH, AND SECTION CORNERS
- PROTECT EXISTING MARKER — PROTECT EXISTING MARKER
- SET EASEMENT MONUMENT
- TEMPORARY EASEMENT POINT
- RIGHT OF WAY MARKER
- BLM MARKER
- PROPERTY PIN
- NOAA MARKER
- QUARTER, SIXTEENTH, AND SECTION CORNERS
- FEDERAL MONUMENT
- WITNESS CORNER
- BENCH MARK
- USGS MARKER
- LOCAL OR PLSS MONUMENT
- SECONDARY CONTROL MONUMENT
- RIGHT OF WAY MARKER
- N 9.88 E 3.81 EL 0.00 — PROJECT CONTROL MONUMENT
- N 10.13 E 3.81 EL 0.00 — DENSIFICATION CONTROL MONUMENT
- N 10.38 E 3.81 EL 0.00 — HIGH ACCURACY REFERENCE NETWORK CONTROL MONUMENT
- PERMANENT, PROPERTY, SLOPE, & UTILITY EASEMENT LINE
- TEMPORARY EASEMENT LINE (EXISTING)
- PROPERTY BOUNDARY LINE (EXISTING AND PROPOSED)
- ACCESS CONTROL LINE
- BARRIER ACCESS CONTROL LINE
- RIGHT OF WAY LINE
- VIRGIN RIGHT OF WAY LINE (PROPOSED)
- CITY LIMIT LINE (EXISTING)
- COUNTY LINE (EXISTING)
- QUARTER SECTION LINE
- SECTION LINE
- SIXTEENTH SECTION LINE
- STATE LINE (EXISTING)
- TOWNSHIP LINE (EXISTING)

SURVEY/ROW

GENERAL NOTES

1. EXISTING FEATURES SHOWN AS SCREENED WEIGHT (LIGHT GRAY SCALE), EXCEPT AS NOTED WITH THE WORD (EXISTING). PROPOSED OR NEW FEATURES SHOWN AS FULL WEIGHT WITHOUT SCREENING, EXCEPT AS NOTED WITH THE WORD (PROPOSED).
2. THESE SYMBOLS ARE INTENDED TO EXPLAIN THE VARIOUS TOPOGRAPHIC FEATURES INVOLVED ON THE DESIGN PLAN SHEETS WHICH ARE PREPARED AT VARIOUS SCALES. NOTES ARE ADDED WHERE NECESSARY TO CLARIFY THE SYMBOL. A LEGEND IS PROVIDED IN THE PLANS FOR SYMBOLS NOT SHOWN ON THE STANDARD SYMBOLS SHEETS.
3. GUARDRAIL, CURB AND GUTTER, ETC., ARE REPRESENTED BY A SYMBOL WITH TYPE GIVEN BY NOTE.

- BACK OF CURB
- TOP OF CURB
- FLOW LINE (FL)
- EDGE OF PAVEMENT
- CURB AND GUTTER
- CURB AND GUTTER-TYPE 2, 4 OR 6
- GUTTER
- CURB CUT
- CURB, GUTTER OR OTHER

CURB AND GUTTER

- GUARDRAIL END ANCHOR
- GUARD POST
- GUARDRAIL-TYPE 3 OR 6
- GUARDRAIL-TYPE 4 OR 7
- GUARDRAIL-TYPE 5 OR HANDRAIL
- GUARDRAIL-TYPE 3A DOUBLE OR TYPE 6 DOUBLE
- CABLE BARRIER

GUARDRAIL

Computer File Information		
Creation Date: 07/04/12	Initials: DD	
Last Modification Date: 07/04/12	Initials: LTA	(R-X)
Full Path: www.coloradodot.info/business/designsupport		(R-X)
Drawing File Name: 100010103.dgn		(R-X)
CAD Ver.: MicroStation V8 Scale: Not to Scale Units: English		(R-X)

Sheet Revisions	
Date:	Comments

Colorado Department of Transportation
4201 East Arkansas Avenue
Denver, Colorado 80222
Phone: (303) 757-9083
Fax: (303) 757-9820
Project Development Branch DD/LTA

STANDARD SYMBOLS

Issued By: Project Development Branch on July 4, 2012

STANDARD PLAN NO.

M-100-1

Sheet No. 1 of 3

ROCK, MASONRY OR MECHANICALLY STABILIZED WALL (FACE)

BRIDGE CURB

BRIDGE RAIL

BRIDGE RAIL-TYPE 3A

FLOW LINE CBC

STRUCTURES MISCELLANEOUS

STRUCTURE

MISCELLANEOUS BUILDING STRUCTURE (PRIMARY)

MISCELLANEOUS STRUCTURE (SECONDARY)

FOUNDATION OR PAD (CONCRETE OR BLOCK)

BUILDING STRUCTURES

RR TELEGRAPH POLE

RR SWITCH

RR GUY POLE

RR SIGNALS WITH OR WITHOUT GATE

RR CROSS BUCK SIGN

RR SIGNAL CONTROLLER CABINET

RR MISCELLANEOUS SYMBOL

RR TRACK CENTERLINE

RAILROAD

BOULDER UNDER 6FT

GEOLOGY MISC SYMBOL

MINESHAFT SYMBOL

ROCK OUTCROP

BOULDER FIELD OR ROCK OVERHANG

GEOLOGY

COMBINATION WIRE FENCE WITH GATE

CHAIN LINK FENCE WITH GATE

BARBED WIRE FENCE WITH GATE

SOUND OR BARRIER FENCE WITH GATE

DEER FENCE WITH GATE

WOOD FENCE WITH GATE

SNOW FENCE WITH GATE

PF PF PF PF PF PF PF

PLASTIC FENCE

SF SF SF SF SF SF SF

SF SF SF SF SF SF SF SF

SILT FENCE

DEBRIS FENCE

FENCE

MISCELLANEOUS TREES

DECIDUOUS TREE

DECIDUOUS SHRUB

TEETER TOTTER SYMBOL

SWING SET SYMBOL

CONIFEROUS TREE

CONIFEROUS SHRUB

BENCH

SPRINKLER HEAD

TREES GROVE

HEDGE OR SHRUB GROVE

EDGE OF WETLANDS

LANDSCAPING

HAZARD WASTE MONITORING WELL

ENVIRONMENTAL CONCERN SITE

EROSION LOG

ROCK CHECK DAM

CONCRETE WASHOUT STRUCTURE

DROP INLET EROSION PROTECTION

TEMPORARY BERM

SOIL RETENTION BLANKET

PIPE INLET EROSION PROTECTION

RIGID INLET PROTECTION

STORM DRAIN INLET PROTECTION

EROSION CHECK

EROSION LOG DITCH CHECK

SILT DIKE

SEDIMENT TRAP/ DEWATERING STRUCTURE

EXISTING WETLAND PATTERN

TEMPORARY SLOPE DRAIN

STABILIZED CONSTRUCTION ENTRANCE

LDA LDA LDA LDA LDA LDA

LIMITS OF DISTRUBED AREA

ENVIRONMENTAL CONCERN

HAZARDOUS WASTE SITE

NW NW NW NW NW NW NW NW

NOXIOUS WEED

ENVIRONMENTAL

SANITARY SEWER MANHOLE

SANITARY SEWER MISCELLANEOUS SYMBOL

SIZE, MATERIAL, OWNER

SANITARY SEWER PIPE

SANITARY SEWER PIPE MISCELLANEOUS

SANITARY SEWER

METAL

CONCRETE

PIPE WITH END SECTION

HEADWALL

PIPE MISCELLANEOUS

PIPES

CHECK DAM UNDER 4 FT

HEADGATE 1

DIVERSION BOX SYMBOL

SPRING SYMBOL

FLOW GAUGE

MISCELLANEOUS WATERWAYS

DITCH WITH FLOW

EDGE OF WATER, CANALS, PONDS, STREAM OR RIVER

DITCHES AND WATERWAY

INLET TYPE 13

INLET TYPE C

INLET TYPE D

INLET VANE GRATE

INLET TYPE R XX FT LENGTH

STORM SEWER MANHOLE

MANHOLE EXISTING

STORM SEWER MISCELLANEOUS

STORM SEWER PIPE

STORM SEWER PIPE MISCELLANEOUS

STORM SEWER

WATER SPIGOT

WATER VALVE

WATER MANHOLE

FIRE HYDRANT

WATER METER

WATER WELL SYMBOL

SIZE, MATERIAL, OWNER

W W W W W W W

WATER LINE

W? W? W? W? W? W? W?

WATER MISCELLANEOUS LINE

WATER

Computer File Information		
Creation Date: 07/04/12	Initials: DD	
Last Modification Date: 07/04/12	Initials: LTA	R-X
Full Path: www.coloradodot.info/business/designsupport		R-X
Drawing File Name: 100010203.dgn		R-X
CAD Ver.: MicroStation V8 Scale: Not to Scale Units: English		R-X

Sheet Revisions	
Date:	Comments

Colorado Department of Transportation
4201 East Arkansas Avenue
Denver, Colorado 80222
Phone: (303) 757-9083
Fax: (303) 757-9820
Project Development Branch DD/LTA

STANDARD SYMBOLS

Issued By: Project Development Branch July 4, 2012

STANDARD PLAN NO.

M-100-1

Sheet No. 2 of 3

PROPANE TANK
GAS JUNCTION BOX
GAS VAULT
GAS LINE MARKER OR AIR VENT
GAS METER LOW PRESSURE
GAS METER HIGH PRESSURE
GAS MISCELLANEOUS
GAS LIGHT
GAS VALVE HIGH OR LOW PRESSURE
SIZE
GAS LINE LOW PRESSURE
SIZE
GAS LINE HIGH PRESSURE
PROPANE GAS LINE
GAS LINES MISCELLANEOUS

GAS

OIL METER HIGH AND LOW PRESSURE
OIL VALVE HIGH AND LOW PRESSURE
OIL MISCELLANEOUS
OIL LINE LOW OR HIGH PRESSURE
OIL MISCELLANEOUS LINE

OIL

GRAVE HEADSTONE SYMBOL
MAIL DROP BOX
FLAG POLE
TRASH BARREL POST
GRAVE SYMBOL
RADIO STATION ANTENNA
MISCELLANEOUS TOPOGRAPHY

MISCELLANEOUS TOPOGRAPHY

CAMPSITE MARKER
TRAILER ELECTRIC HOOKUP
TRAILER DUMP STATION
CAMPFIRE RING
TRAILER SEWER INLET
TRAILER WATER HOOKUP
CAMPSITE GRILL
CAMPSITE TABLE

CAMPING

LIGHT STANDARD
HIGH MAST LIGHT STANDARD
SPOT OR FLOOD LIGHT

LIGHTING

ELECTRICAL PEDESTAL OR PULL BOX
TRANSMISSION TOWER
WIND POWERED GENERATOR
RELOCATED LIGHT STANDARD
DECORATIVE LIGHT STANDARD
CATENARY POLE FOUNDATION
ELECTRICAL MANHOLE
POWER POLE
TRANSFORMER ON POLE
ELECTRICAL OUTLET
ELECTRICAL MISCELLANEOUS
GUY WIRE
ELECTRICAL VAULT OR TRANSFORMER
GUY POST
FIRE ALARM BOX
ELECTRICAL UNDERGROUND LINE
ELECTRICAL OVERHEAD LINE
ELECTRICAL MISCELLANEOUS LINE

ELECTRICAL

CABLE TV POLE
CABLE TV RISER
COMBINATION POLE-POWER,TELEPHONE
TV ANTENNA
TV MISCELLANEOUS
TV MANHOLE
TV UNDERGROUND CABLE
TV OVERHEAD CABLE
TV MISCELLANEOUS CABLE

TELEVISION

TELEPHONE GUY POLE
FIBER OPTIC CABLE MARKER
TELEPHONE MANHOLE
COMBINATION POLE-POWER
TELEPHONE MISCELLANEOUS
COMBINATION GUY POLE-POWER
TELEPHONE UNDERGROUND CONDUIT OR CABLE
FIBER OPTICS UNDERGROUND CABLE
TELEPHONE OVERHEAD LINE
TELEPHONE MISCELLANEOUS LINE

TELEPHONE

FIBER MARKER DOME
FIBER MARKER SLATE
RWIS - REMOTE WEATHER SENSOR
VMS-BUTTERFLY
VMS-GROUND
VMS-CANTILEVER
VMS-SIGN BRIDGE
ITS CONDUIT

INTELLIGENT TRANSPORTATION SYSTEM

CENTER YELLOW SOLID DOUBLE
CENTER YELLOW SOLID BROKEN (NO PASS)
4 INCH WIDE
8 INCH WIDE
LANE LINE BROKEN
LANE DROP
CHANNELIZING OR EDGE LINE
4 INCH WIDE
8 INCH WIDE
DOTTED BROKEN
STOP LINE
- INTERNATIONAL SYMBOL OF ACCESS
R R - RAILROAD CROSSING
- BICYCLE PED ACCESS

TRAFFIC STRIPING

TRAVEL DIRECTION
BARRIER LIGHT
FLAGGER
DELINEATOR-TYPE I
SEQUENCING ARROW PANEL
FLASHING BEACON
DELINEATOR-TYPE II
DELINEATOR-TYPE III
BUTTERFLY SIGN
HALF BUTTERFLY SIGN
IMPACT ATTENUATOR
SIGN ASSEMBLY
SINGLE POST SIGN
DOUBLE POST SIGN
SIGN-WITH FLASHING BEACON
ROAD CLOSURE GATE BEACON SYMBOL
ROAD CLOSURE GATE SYMBOL
DEER REFLECTORS
TRAFFIC CONTROL MISCELLANEOUS DEVICE
TRAFFIC CONTROL DEVICE

TRAFFIC CONTROL

SIGNAL SPAN WIRE POLE
DOUBLE MAST ARM POLE
LUMINAIRE
SIGNAL FACE
SIGNAL POLE WITH MAST ARM
SIGNAL FACE WITH BACKPLATE
SIGNAL CONTROLLER AND CABINET (4 FT)
TELEMETRY ANTENNA
PULL BOX
MICRODETECTOR
VIDEO DETECTION CAMERA
FIRE PREEMPTION UNIT AND TIMER
PEDESTRIAN SIGNAL FACE
PEDESTRIAN PUSH BUTTON
PEDESTAL POLE
PULL BOX SPECIAL
TRAFFIC CONDUIT

TRAFFIC SIGNAL

Computer File Information		
Creation Date: 07/04/12	Initials: DD	
Last Modification Date: 07/04/12	Initials: LTA	R-X
Full Path: www.coloradodot.info/business/designsupport		R-X
Drawing File Name: 100010303.dgn		R-X
CAD Ver.: MicroStation V8 Scale: Not to Scale	Units: English	R-X

Sheet Revisions	
Date:	Comments

Colorado Department of Transportation
4201 East Arkansas Avenue
Denver, Colorado 80222
Phone: (303) 757-9083
Fax: (303) 757-9820
Project Development Branch DD/LTA

STANDARD SYMBOLS

Issued By: Project Development Branch on July 4, 2012

STANDARD PLAN NO.
M-100-1
Sheet No. 3 of 3

A

AAC	Aluminum Arch Culvert
AADT	Annual Average Daily Traffic
ABC	Aggregate Base Course
Abut	Abutment
ACM	Abestos Containing Materials
ADA	Americans with Disabilities Act
ADT	Average Daily Traffic
AE	Architect-Engineer, Architecture, Engineering
AEC	Architecture, Engineering and Construction
AGA	American Gas Association
Alt	Alternate
API	American Petroleum Institute
APL	Approved Products List
Approx	Approximate
APWA	American Public Works Association
AQCC	Air Quality Control Commission
ARE	Additional Requested Element (Design/Build Terminology)
AREMA	American Railway Engineering & Maintenance-of-Way Association
AHSTA	Ahead Station
ARA	Asphalt Rejuvenating Agent
ASBI	American Segmental Bridge Institute
ASD	Allowable Stress Design
ASOP	American Society of Photogrammetry
ASR	Alkali Silica Reactivity
ASSE	American Society of Sanitary Engineering, American Society of Safety Engineers
Asst	Assistant
ATB	Asphalt Treated Base
ATM	Active Traffic Management
AUTS	Actual Ultimate Tensile Strength

B

Bk to Bk	Back to Back
BEI	By Equal Increments
BM	Bench mark
BPF	Blows Per Foot
BAFO	Best and Final Offer
Bbl	Barrels
BC	Bolt Circle
Beg	Begin
Bk	Back
Bldg	Building
BLM	Bureau of Land Management
Blvd	Boulevard
BMP	Best Management Practice
BNSF	Burlington Northern & Santa Fe Railroad
Bott	Bottom
BP	Bearing Pressure
Brg	Bearing
Bk Sta	Back Station
BT	Beginning of Transition
Btwn	Between

C

℄	Centerline
C&G	Curb and Gutter
CA	Concrete Arch
CAC	Concrete Arch Culvert
CAD	Computer Aided Design, Computer Aided Drafting
CADD	Computer Aided Design and Drafting
CBC	Concrete Box Culvert
CBG	Concrete Box Girder
CBGC	Concrete Box Girder Continuous
CBGCP	Concrete Box Girder Continuous Prestressed
CBGP	Concrete Box Girder Prestressed
CBGS	Concrete Box Girder Segmented
CBR	California Bearing Ratio
CCR	Code of Colorado Regulations, as amended
CDTPG	Concrete Double-Tee Prestressed Girder
CE	Construction Engineering
CF	Cubic Feet
CFS	Cubic Feet per Second
CG	Center of Gravity
CHP	Colorado Highway Patrol
CI	Cast Iron or Concrete on Rolled I-Beam
CIC	Concrete on Rolled I-Beam Continuous
CICK	Concrete on Rolled I-Beam Continuous & Composite
CICKP	Concrete on Rolled I-Beam Continuous & Composite Prestressed
CIK	Concrete on Rolled I-Beam Composite
CIKP	Concrete on Rolled I-Beam Composite Prestressed
CIP	Cast-in-Place or Cost in Place
CIR	Cold In-Place Recycling
Clr	Clear
cm	Centimeters
CM	Corrugated Metal
CMAQ	Congestion Mitigation Air Quality
CMP	Corrugated Metal Pipe
CMU	Concrete Masonry Unit
COC	Certificate of Compliance
Col	Column
Comp	Composite
Conc	Concrete
Conn	Connection
Const	Construction
Const Jt	Construction Joint
Cont	Continuous
Corr	Corrugated
CPE	Corrugated Polyethylene Pipe
CPG	Concrete Prestressed Girder (Precast)
CPGC	Concrete Prestressed Girder Continuous (Precast)
CPT	Corrugated Polyethylene Tubing
CR	County Road
CRF	Concrete Rigid Frame
CS	Curve to Spiral, Commercial Standard, Concrete Slab
CSC	Concrete Slab Continuous
CSG	Concrete Slab & Girder (Poured in Place)
CSGC	Concrete Slab & Girder Continuous (Poured in Place)
CSGCP	Concrete Slab & Girder Continuous Prestressed (Poured in Place)
CSGP	Concrete Slab & Girder Prestressed (Poured in Place)
Csk	Countersunk
CSL	Cross Hole Sonic Logging
CSP	Corrugated Steel Pipe or Concrete Slab Prestressed
CSPC	Concrete Slab Prestressed Continuous
CTB	Cement Treated Base
CTR	Certified Test Reports
Ctr	Center
CY	Cubic Yards
CZ	Clear Zone

D

D	Degree of Curvature, or Density
DB	Design Build
DAS	Deformed Anchor Stud
dB	decibels
DBA	Deformed Bar Anchor
Dbl	Double

GENERAL NOTES

1. ABBREVIATIONS SHOULD BE UPPER AND LOWER CASE LETTERS EXCEPT WHERE ALL UPPER CASE LETTERS ARE REQUIRED.
   Const Jt = Construction Joint
2. ACRONYMS SHALL BE ALL UPPER CASE LETTERS.
   CBC = Concrete Box Culvert
3. ABBREVIATIONS SHALL BE USED ONLY WHEN THE WORDS CANNOT BE COMPLETELY SPELLED OUT DUE TO MULTIPLE FACTORS, SUCH AS A LACK OF SPACE ON THE SHEET.

Deg, °F, °C,	Degrees (Thermal) - Degrees Fahrenheit, Degrees Celsius
Dgn	Design or Microstation Drawing
DH	Design Height or Avg height for qty calculations
DHV	Design Hour Volume
DHW	Design High Water
DI	Ductile Iron
Dia	Diameter
DNR	Department of Natural Resources
DOW	Division of Wildlife (Colorado)
DRCOG	Denver Regional Council of Governments
DTD	Division of Transportation Development (CDOT)
DTM	Digital Terrain Model
Dwg	AutoCAD Drawing

E

e.g.	Exempli Gratia (For Example)
EA	Environmental Assessment
EATB	Emulsified Asphalt Treated Base
EB	Eastbound
EF	Each Face
Elev	Elevation
Engr	Engineer
EPA	Environmental Protection Agency
EPDM	Ethylene Propylene Diene Monomer-class rubber
Eq	Equal
ESAL	Equivalent Single Axle Load
Est	Estimate
ET	Ending of Transition
EVT	Event Point (InRoads Terminology)
EW	Each Way
E	Expansion Bearing
Exc	Excavation
Exp Jt	Expansion Joint
Ext	Exterior

F

F	Fixed Bearing
FL	Flow Line
FAA	Federal Aviation Administration
FASB	Foamed Asphalt Stabilized Base
FCM	Fracture Critical Member
FDR	Full Depth Reclamation
Fed	Federal
FEMA	Federal Emergency Management Agency
FES	Flared End Section
FF	Far Face or Front Face
Fig	Figure
Fin	Finished
Fl	Floor
Flg	Flange
FM	Factory Mutual
FMM	Field Materials Manual
FPM	Feet Per Minute
FPS	Feet Per Second
FRA	Federal Railroad Administration
Freq	Frequency
FRP	Fiber Reinforced Polymer
FS	Planned Finish Surface
Ft	Feet
Ft Kip	Foot Kips
Ft Lb	Foot Pounds
FTA	Federal Transit Administration
Ftg	Footing
FWD	Falling Weight Deflectometer

G

Ga	Gage or Gauge
Gal	Gallons
Galv	Galvanized
Gd	Guided expansion bearing
Gir, G	Girder
GIS	Geographical Information System
GL	Girt Line
GPM	Gallons Per Minute
GPS	Global Positioning System
GRI	Geosynthetic Research Institute
GRS	Geosynthetic Reinforced Soil
GSI	Geosynthetic Institute

H

HAS	Headed Anchor Stud
HAZMAT	Hazardous Materials
HC	Horizontal Clearance
HCL	Horizontal Control Line
HCM	Highway Capacity Manual
Hd	Head
HDPE	High Density Polyethylene
HDPP	High Density Polypropylene
Hex Hd	Hexagonal Head
HID	High Intensity Discharge (Lamps)
HIR	Hot In-Place Recycling
HLMR	Highload Multi-Rotational
HMA	Hot Mix Asphalt
Horiz	Horizontal
HOV	High-Occupancy Vehicle
HP	Horsepower
HPC	High Performance Concrete
HS	High Strength
Ht	Height
HW	High Water
Hwy	Highway
Hyd	Hydraulic

I

ICEA	Insulated Cable Engineers Association
ID	Inside Diameter
IMP	Incident Management Plan
In. Kips	Inch Kips
In. Lb.	Inch Pounds
In.	Inches
Incl	Included
Int	Interior
Inv	Invert
IRI	International Roughness Index
ISO	International Organization for Standards
ITAA	Information Technology Association of America
ITS	Intelligent Transportation System
IVHS	Intelligent Vehicle Highway System

J

JB	Junction Box
JPCP	Jointed Plain Concrete Pavement
Jt	Joint

K

Kip	Thousand Pounds
KSF	kips per square foot
KSI	Kips per square inch
KW	Kilowatt

L

L	Length, Angle(steel)
Lb	Pounds
Lb/Ft	pound per foot
Lb/SY	Pounds per square yard
Lb-Ft	pound foot
LCCA	Life Cycle Cost Analysis
LED	Light Emitting Diode
LEED	Leadership in Energy and Environmental Design
LF	Linear Feet
LFD	Load Factor Design
LL	Liquid Limit
LLDPE	Linear Low-Density Polyethylene
LRFD	Load and Resistance Factor Design
LS	Lump Sum or Length of Spiral
Lt	Left
LTB	Lime Treated Base
LTDS	Required Long Term Design Strength
Lum	Luminaire

M

m	Meters
MA	Mobile Attenuator
Maint	Maintenance
MARV	Minimum Average Roll Value
Matl	Material
Max	Maximum
MBTA	Migratory Bird Treaty Act
MFBM	Thousand Foot Board Measure
Mfg	Manufactured or Manufacturer
MHT	Method of Handling Traffic
Mi	Mile
Min	Minimum
Misc	Miscellaneous
mm	Millimeters
MP	Milepost
MPH	Miles Per Hour
M_R	Resilient Modulus
MR	Modulus of Rupture

N

NAD	North American Datum
NAVD	North American Vertical Datum
NB	Northbound, Total Number of Blocks
N_{DES}	Recommended SuperPave™ Gyratory Design Revolution
NDT	Nondestructive Testing
NECA	National Electrical Contractors Association
NEPA	National Environmental Policy Act
NESC	National Electric Safety Code
NF	Near Face
NFPA	National Fire Protection Association
NGS	National Geodetic Survey
NGVD	National Geodetic Vertical Datum of 1929
NHS	National Highway System
NICET	National Institute for Certification of Engineering Technologies
NIP	Nail in Place
NMAS	Nominal Maximum Aggregate Size
No	Number
Nom	Nominal
NPDES	National Pollutant Discharge Elimination System
NPT	National Pipe Thread
NS	Near Side
NTCIP	National Transportation Communications for ITS Protocol
NTP	Notice to Proceed
NTS	Not to Scale

Computer File Information		
Creation Date: 07/04/12	Initials: DD	
Last Modification Date: 07/04/12	Initials: LTA	R-X
Full Path: www.coloradodot.info/business/designsupport		R-X
Drawing File Name: M0100020204.dgn		R-X
CAD Ver.: MicroStation V8 Scale: Not to Scale	Units: English	R-X

Sheet Revisions	
Date:	Comments

Colorado Department of Transportation
4201 East Arkansas Avenue
Denver, Colorado 80222
Phone: (303) 757-9083
Fax: (303) 757-9820
Project Development Branch DD/LTA

ACRONYMS AND ABBREVIATIONS

Issued By: Project Development Branch July 4, 2012

STANDARD PLAN NO.

M-100-2

Sheet No. 2 of 4

O

OC	On Center
OD	Outside Diameter
OGFC	Open Grade Friction Course
OJT	On-the-Job Trainee or On-the-Job Training
Opp Hand	Opposite Hand
oz	Ounces

P

PC	Point of Curve
PCA	Portland Cement Association
PCBC	Concrete Box Culvert Precast
PCC	Point of Compound Curve
PCCP	Portland Cement Concrete Pavement
PDA	Pile Driving Analyzer
PE	Preliminary Engineering, or Professional Engineer or Permanent Easement
Ped	Pedestrian
PG	Profile Grade or Performance Grade
PGL	Profile Grade Line
PI	Point of Intersection
PL, Pl	Plate
PLS	Professional Land Surveyor
PM	Project Manager
PMBB	Plant Mix Bituminous Base
PMBP	Plant Mix Bituminous Pavement
PMSC	Plant Mix Seal Coat
POC	Point on Curve
POSS	Point of Slope Selection
POT	Point on Tangent
PPE	Personal Protective Equipment
PRC	Point of Reverse Curve
Proj	Project or Projection
psf	Pounds per square foot
psi	Pounds per square inch
PT	Point of Tangent
PTFE	Polytetrafluoroethylene
PTI	Post-Tensioning Institute
PUC	Public Utilities Commission
PVC	Poly Vinyl Chloride (pipe), Point of Vertical Curve
PVI	Point of Vertical Intersection
Pvmt	Pavement
PVT	Point of Vertical Tangency

Q

Q	Peak Discharge or Flow Volume
QA	Quality Assurance
QC	Quality Control
QMP	Quality Management Plan
QML	Qualified Manufacturers List

R

R	Radius
RA	Rubble Arch
RAC	Rubble Arch Culvert
rad	radians
RAP	Reclaimed Asphalt Pavement
RAS	Reclaimed Asphalt Shingles
RC	Reverse Crown
RCC	Roller Compacted Concrete
RCP	Reinforced Concrete Pipe
RCPC	Reinforced Concrete Pipe Culvert
Rdwy	Roadway
RE	Resident Engineer or Railroad Easement
Ref	Reference
Reinf	Reinforcing
Rem	Remove or Removal
Repl	Replace
Req	Required
Rev	Revised, Revision
RG	Riveted Plate Girder
RGC	Riveted Plate Girder Continuous
RL	Reinforcement Length
RME	Region Materials Engineer
rpm	Revolutions Per Minute
RSC	Rigid Steel Conduit
RSS	Reinforced Soil Slope
Rt	Right
RTD	Region Transportation Director or Regional Transportation District
RWIS	Road Weather Information System

S

SA	Steel Arch
SAC	Steel Arch Culvert
San	Sanitary
SB	Southbound
SBA	Small Business Administration
SBG	Steel Box Girder
SBGC	Steel Box Girder Continuous
SC	Spiral to Curve
Sch	Schedule
SCS	Spiral Curve Spiral
SDG	Steel Deck Girder
SDGC	Steel Deck Girder with Floor Beam System
SDGCK	Steel Deck Girder Continuous & Composite
SDI	Steel Decks Institute
SDT	Steel Deck Truss
Sdwk	Sidewalk
Sect	Section
SF	Square Feet
SH	State Highway
Shldr	Shoulder
SHPO	State Historic Preservation Office
SHRP	Strategic Highway Research Program
Sht	Sheet
SIGN	Overhead Sign
SIGNB	Overhead Sign-Butterfly
SIGNC	Overhead Sign-Cantilever
SIGND	Overhead Sign + Cantilever
Sim	Similar
SIP	Stay in Place
SJI	Steel Joists Institute
SLT	Steel Low Truss
SMA	Stone Matrix Asphalt
SN	Structural Number
Spa	Spaces or Spaced
Specs	Specifications
SpG	Specific Gravity
Spl	Splice
Sq In	Square Inches
Sq Mi	Square Miles
Sq	Square
SRW	Segmental Retaining Walls
SSE	Steel Stringer-Earth Filled
SSM	Steel Stringer-Metal Plank Deck
SSMC	Steel Stringer-Metal Plank Deck Continuous
SSPC	Society for Protective Coatings
SSS	Steel Stringer-Timber Deck
SSSC	Steel Stringer-Timber Deck Continuous
ST	Spiral to Tangent
St	Straight or Street
Sta	Station
Std	Standard
STG	Steel Thru Girder
Str	Structure, Structural
STT	Steel Thru Truss
SUSP	Suspension Bridge
SY	Square Yards
Sym	Symmetrical

Computer File Information		
Creation Date: 07/04/12	Initials: DD	
Last Modification Date: 07/04/12	Initials: LTA	(R-X)
Full Path: www.coloradodot.info/business/designsupport		(R-X)
Drawing File Name: M0100020304.dgn		(R-X)
CAD Ver.: MicroStation V8 Scale: Not to Scale Units: English		(R-X)

Sheet Revisions	
Date:	Comments

Colorado Department of Transportation
4201 East Arkansas Avenue
Denver, Colorado 80222
Phone: (303) 757-9083
Fax: (303) 757-9820
Project Development Branch DD/LTA

ACRONYMS AND ABBREVIATIONS

Issued By: Project Development Branch July 4, 2012

STANDARD PLAN NO.

M-100-2

Sheet No. 3 of 4

T

T&B	Top and Bottom
T&E	Threatened & Endangered Species
T	Tons
TAS	Threaded Anchor Stud
TBC	Timber Box Culvert
TC	Tangent to Curve
TCD	Traffic Control Devices
TCP	Traffic Control Plan
TD	Timber Stringer (Untreated) Concrete Deck
TDH	Total Dynamic Head
Temp	Temporary or Temperature
Thd	Thread
THHN	Thermoplastic High Heat-resistant Nylon coated (Insulation designation for wire)
THWN	Thermoplastic High Water-resistant Nylon coated (Insulation designation for wire)
TIG	Tungsten Inert Gas (Welding)
TLA	Timber Laminated Arch (Gluelam)
TLS	Timber Laminated Stringer(Gluelam)
TLT	Timber Low Truss
TM	Timber Stringer (Untreated) Metal Deck
TMP	Transportation Management Plan
Tot	Total
TPI	Threads per Inch
TS	Tangent to Spiral, Timber Stringer (Untreated) Timber Deck
TSLAB	Timber Slab
TTC	Timber Culvert
TTD	Timber Stringer-Concrete Deck
TTM	Timber Stringer- Metal Deck
TTS	Timber Stringer- Timber Deck
TTT	Timber Thru Truss
TUNC	Tunnel-Concrete Lined
TUNR	Tunnel-Thru Rock-No Lining
Typ	Typical

U

UG	Underground
UNC	Uniform National Coarse (screw thread)
UNCC	Utility Notification Center of Colorado
UNF	Uniform National Fine (screw thread)
UNO	Unless Noted Otherwise
UPRR	Union Pacific Railroad
UPS	Uninterruptible Power Supply
USACE	United States Army Corp of Engineers
USCS	Unified Soil Classification System
USDA	United States Department of Agriculture
USDOT	United States Department of Transportation
USFWS	United States Fish and Wildlife Service
USGS	US Geological Survey
Util	Utility or Utilities
UV	Ultraviolet

V

VC	Vertical Curve
VCP	Vitrified Clay Pipe
Veh	Vehicle
Vert	Vertical
VFA	Voids Filled With Asphalt
VMA	Voids in the Mineral Aggregate
VMS	Variable Message Sign
Vol	Volume
VPC	Vertical Point of Curvature
VPI	Vertical Point of Intersection
VPT	Vertical Point of Tengency

W

W/C	Water-Cement Ratio
WALL	Retaining Wall
WB	Westbound
WBS	Work Breakdown Structure
WF	Wide Flange (Steel section)
WG	Welded Girder
WGC	Welded Girder Continuous
WGCK	Welded Girder Continuous & Composite
WGCKP	Welded Girder Continuous, Composite Prestressed
WGK	Welded Girder Composite
WGKP	Welded Girder Composite Prestressed
WIMS	Weigh-In-Motion Station
WP	Work Point
WQCD	Water Quality Control Division (Colorado Department of Public Health and Environment)
WRI	Wire Reinforcement Institute
WS	Water Surface
WSN	Weighted Structural Number
Wt	Weight
WWF	Welded Wire Fabric, typically referred to very light gauge wire for crack control
WWR	Welded Wire Reinforcement

Y

Yd	Yard

SYMBOLS

400	#4 REBAR BENDING SHAPE
500	#5 REBAR BENDING SHAPE
600	#6 REBAR BENDING SHAPE
@	at
&	and
ϕ ∅	Diameter
°, ', "	Degrees, Minutes, Seconds
', "	Feet, inches
#	Number or Pound
(E)	Epoxy Coated Rebar
(N)	Non-Epoxy Coated Rebar
(GXX)	Girder Label
°F	Fahrenheit
°C	Celsius
≈	Approximate
#	Interstate Highway
#	US Highway
C #	State Highway

Computer File Information		
Creation Date: 07/04/12	Initials: DD	
Last Modification Date: 07/04/12	Initials: LTA	(R-X)
Full Path: www.coloradodot.info/business/designsupport		(R-X)
Drawing File Name: M0100020404.dgn		(R-X)
CAD Ver.: MicroStation V8 Scale: Not to Scale Units: English		(R-X)

Sheet Revisions	
Date:	Comments

Colorado Department of Transportation
4201 East Arkansas Avenue
Denver, Colorado 80222
Phone: (303) 757-9083
Fax: (303) 757-9820
Project Development Branch DD/LTA

ACRONYMS AND ABBREVIATIONS

Issued By: Project Development Branch July 4, 2012

STANDARD PLAN NO.
M-100-2
Sheet No. 4 of 4

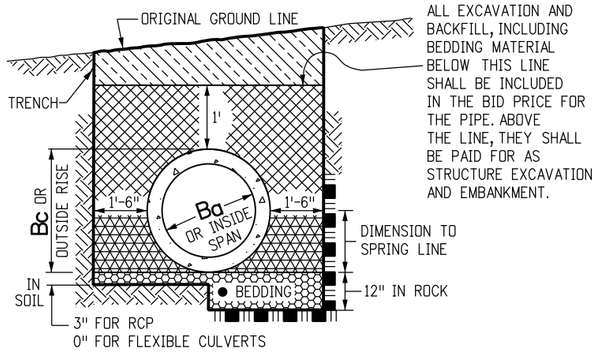

PIPE IN TRENCH

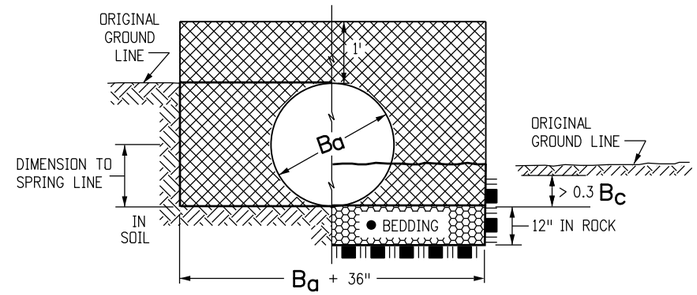

CIRCULAR PIPE

(WHERE ORIGINAL GROUND LINE IS BETWEEN 0.3 B_C AND B_C + 1 FT. ABOVE FLOWLINE)

● THE BEDDING MATERIAL FOR RIGID PIPE IN SOIL SHALL BE 3 IN. OF LOOSE STRUCTURE BACKFILL (CLASS 1 OR 2). BEDDING IS NOT REQUIRED FOR FLEXIBLE PIPE IN SOIL. BEDDING MATERIAL FOR RIGID OR FLEXIBLE PIPE IN ROCK SHALL BE 12 IN. OF LOOSE STRUCTURE BACKFILL, CLASS 1.

▲ WHEN TWO OR MORE CONDUITS ARE LAID SIDE-BY-SIDE, THEY SHALL BE PLACED SO THAT THEY ARE ½ OUTSIDE DIAMETER, OR ½ OUTSIDE SPAN, OR 3 FT. APART, WHICHEVER IS LESS. HOWEVER, IF END SECTIONS ARE USED, THE MINIMUM SPACING SHALL BE 1 FT. BETWEEN END SECTIONS.

GENERAL NOTES

1. EXCAVATION AND BACKFILL PATTERNS DIFFERENT FROM THOSE INDICATED ON THESE SHEETS WILL BE SHOWN ELSEWHERE ON THE PLANS.
2. EXCAVATION FOR CHANNEL CHANGE OR CHANNEL IMPROVEMENT WILL BE EITHER UNCLASSIFIED EXCAVATION OR MUCK EXCAVATION AND WILL BE NOTED ON THE PLANS. EXCAVATION FROM THE CHANNEL FLOWLINE TO THE DEPTH REQUIRED FOR THE NEW STRUCTURE AND INCIDENTAL CHANNEL EXCAVATION WILL BE PAID FOR AS STRUCTURE EXCAVATION.
3. STRUCTURE FOOTINGS WHICH ARE LOCATED IN ROCK SHALL BE POURED OUT TO UNDISTURBED ROCK WITHOUT FORMING IN CONFORMANCE WITH SUBSECTION 601.09(b).
4. STRUCTURAL PLATE CULVERTS SHALL BE CONSTRUCTED AS SHOWN ON THE PLANS.
5. B_a EQUALS THE INSIDE DIAMETER OF A PIPE AND B_c EQUALS THE OUTSIDE DIAMETER OF A PIPE. FOR THIN WALLED PIPES, IT IS ASSUMED THAT $B_a = B_c$.
6. APPROXIMATE STRUCTURE EXCAVATION AND BACKFILL QUANTITIES, UP TO 1 FT. OVER THE PIPE WILL BE SHOWN ON THE PLANS, FOR INFORMATION ONLY.

LEGEND

- STRUCTURE EXCAVATION LIMITS
- STRUCTURE BACKFILL, CLASS 1 OR 2, AS SHOWN ON PLANS
- STRUCTURE BACKFILL, CLASS 1
- EMBANKMENT MATERIAL
- EARTH
- ROCK
- BEDDING
- CONCRETE
- ⇧ = WHEN FLOW LINE OF CULVERT IS LESS THAN 0.3 B_c BELOW THE ORIGINAL GROUND LINE, EMBANKMENT SHALL BE BUILT UP TO 0.3 B_c ABOVE THE FLOW LINE AND TRENCH EXCAVATED TO THE BOTTOM OF PIPE OR AS SHOWN.

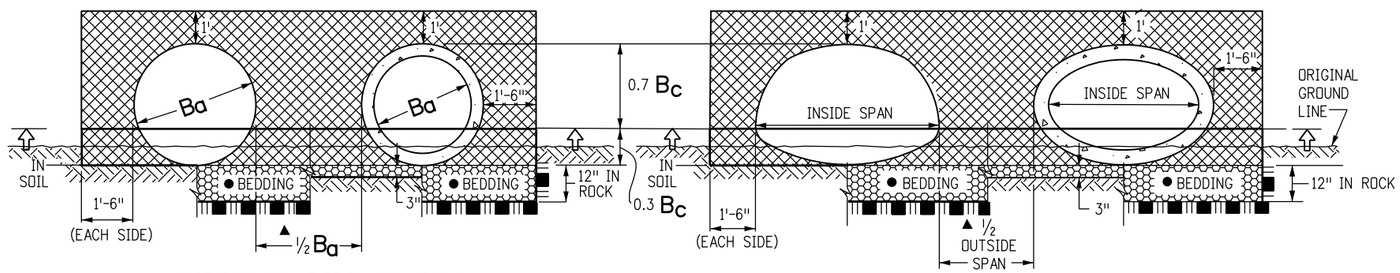

CIRCULAR PIPE IN FILL

ARCH OR ELLIPTICAL PIPE IN FILL

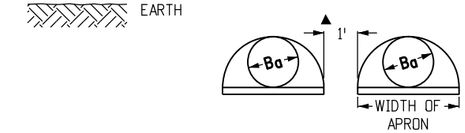

CONDUIT WITH END SECTIONS

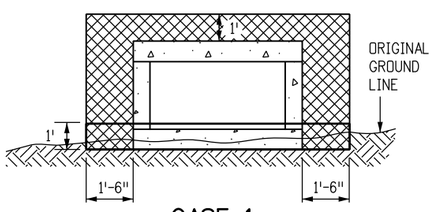

CASE 1

APPLIES WHEN THE ORIGINAL GROUND LINE IS LESS THEN 1 FT. ABOVE THE BOTTOM OF THE BOX CULVERT. THE EMBANKMENT SHALL BE BUILT UP TO 1 FT. ABOVE THE BOTTOM OF THE BOX CULVERT AND THEN EXCAVATED TO THE BOTTOM OF THE BOX CULVERT. THIS EMBANKMENT AND EXCAVATION WILL NOT BE MEASURED AND PAID FOR SEPARATELY BUT SHALL BE INCLUDED IN THE COST OF THE WORK.

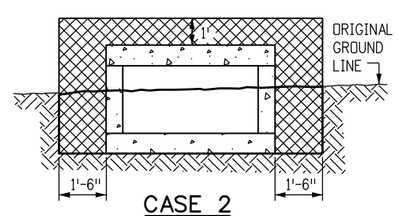

CASE 2

APPLIES WHEN THE ORIGINAL GROUND LINE IS MORE THAN 1 FT. ABOVE THE BOTTOM OF THE BOX CULVERT.

CONCRETE BOX CULVERT

IN BOTH CASES, THE TRENCH (OUTLINED BY THE THICK SOLID LINE) SHALL THEN BE EXCAVATED TO ACCOMMODATE CONSTRUCTION OF THE BOX CULVERT.

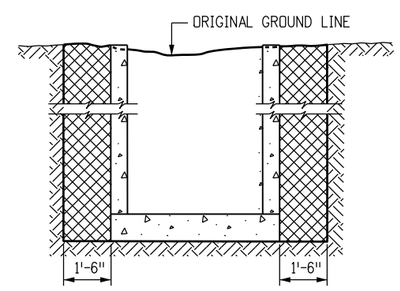

DROP INLETS AND DIVISION BOXES

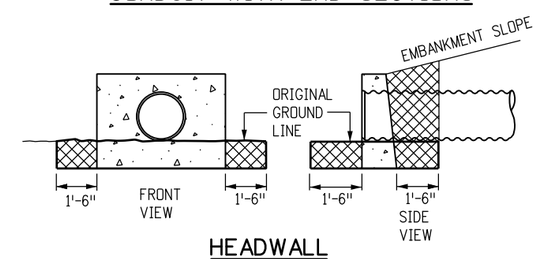

HEADWALL

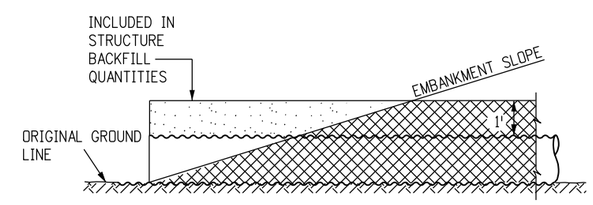

END OF PIPE

Computer File Information		Sheet Revisions	
Creation Date: 07/04/12 Initials: DD		Date:	Comments
Last Modification Date: 07/04/12 Initials: LTA	R-X		
Full Path: www.coloradodot.info/business/designsupport	R-X		
Drawing File Name: 206010102.dgn	R-X		
CAD Ver.: MicroStation V8 Scale: Not to Scale Units: English	R-X		

Colorado Department of Transportation
4201 East Arkansas Avenue
Denver, Colorado 80222
Phone: (303) 757-9083
Fax: (303) 757-9820
Project Development Branch DD/LTA

EXCAVATION AND BACKFILL FOR STRUCTURES

Issued By: Project Development Branch July 4, 2012

STANDARD PLAN NO.

M-206-1

Sheet No. 1 of 2

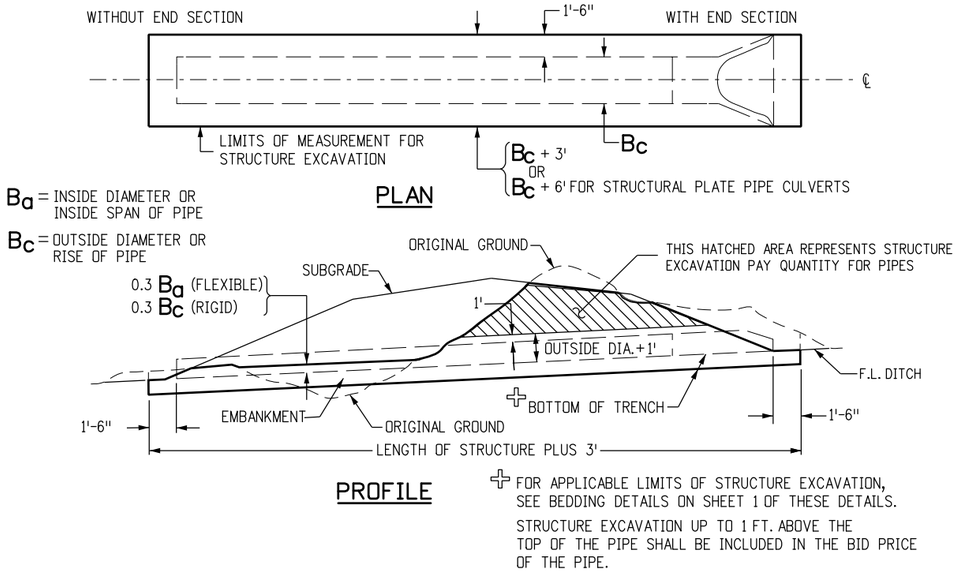

✢ FOR APPLICABLE LIMITS OF STRUCTURE EXCAVATION, SEE BEDDING DETAILS ON SHEET 1 OF THESE DETAILS.

STRUCTURE EXCAVATION UP TO 1 FT. ABOVE THE TOP OF THE PIPE SHALL BE INCLUDED IN THE BID PRICE OF THE PIPE.

STRUCTURE EXCAVATION MEASUREMENT FOR PIPE CULVERTS

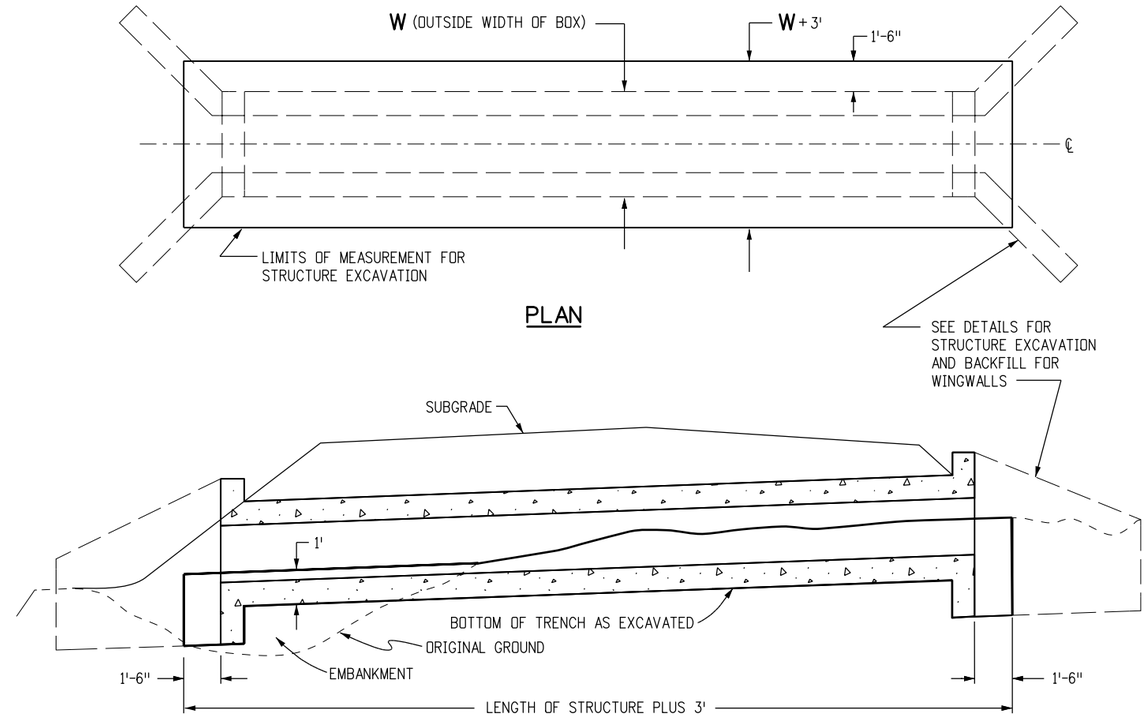

STRUCTURE EXCAVATION MEASUREMENT FOR CONCRETE BOX CULVERTS

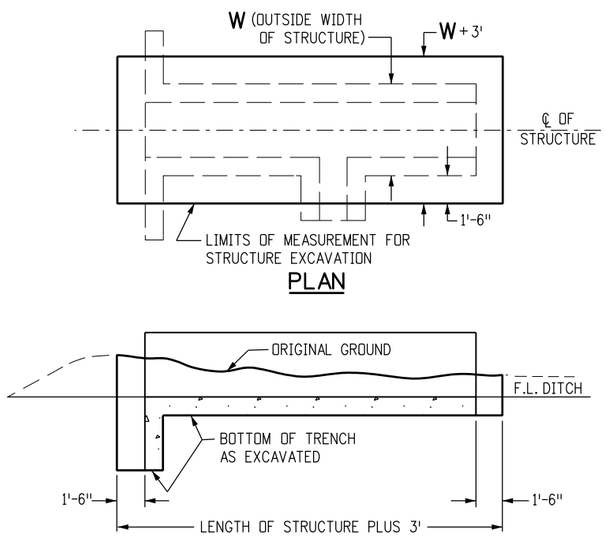

STRUCTURE EXCAVATION MEASUREMENT FOR DIVISION BOXES

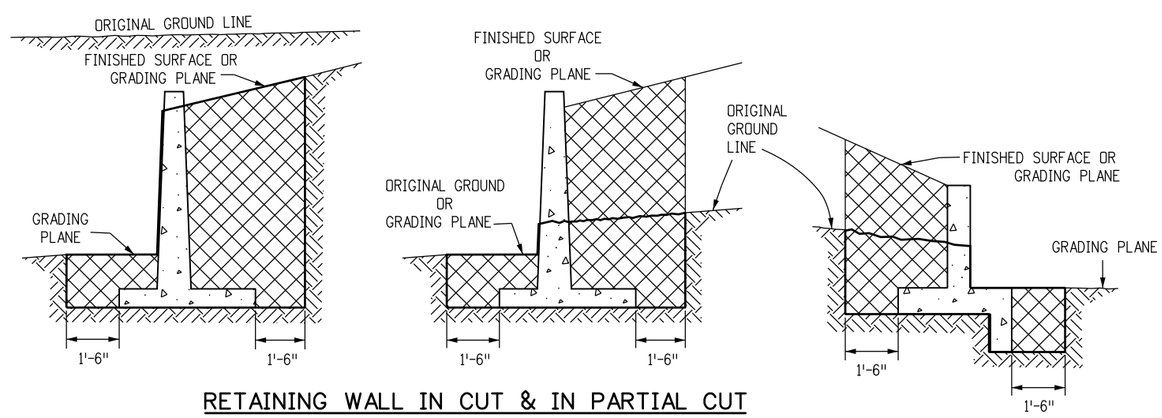

RETAINING WALL IN CUT & IN PARTIAL CUT

ANY ADDITIONAL EXCAVATION BEHIND THE LIMITS SHOWN SHALL BE FILLED WITH CLASS I BACKFILL MATERIAL. THE ADDITIONAL EXCAVATION AND BACKFILL WILL NOT BE MEASURED AND PAID FOR.

WINGWALL

LEGEND

- STRUCTURE EXCAVATION LIMITS
- STRUCTURE BACKFILL, CLASS 1 OR 2, AS SHOWN ON PLANS
- CONCRETE

Computer File Information		
Creation Date: 07/04/12	Initials: DD	
Last Modification Date: 07/04/12	Initials: LTA	(R-X)
Full Path: www.coloradodot.info/business/designsupport		(R-X)
Drawing File Name: 206010202.dgn		(R-X)
CAD Ver.: MicroStation V8 Scale: Not to Scale Units: English		(R-X)

Sheet Revisions	
Date:	Comments

Colorado Department of Transportation
4201 East Arkansas Avenue
Denver, Colorado 80222
Phone: (303) 757-9083
Fax: (303) 757-9820
Project Development Branch DD/LTA

EXCAVATION AND BACKFILL FOR STRUCTURES

Issued By: Project Development Branch July 4, 2012

STANDARD PLAN NO.

M-206-1

Sheet No. 2 of 2

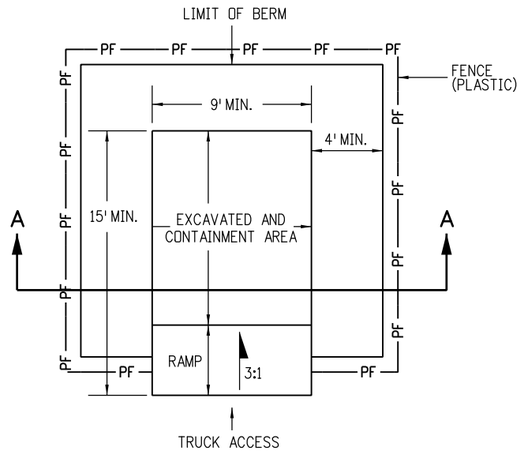

PLAN VIEW

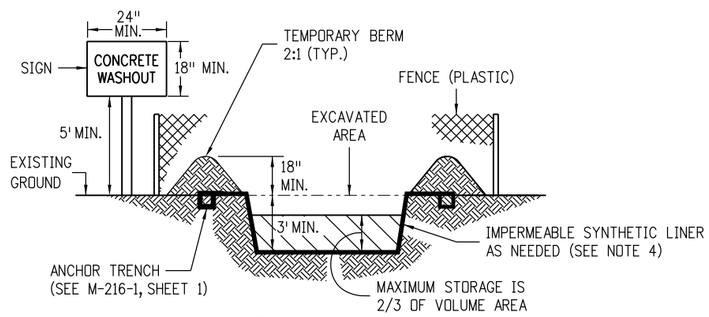

SECTION A-A

NOTES:

1. A FENCE (PLASTIC) CONFORMING TO SECTION 607 SHALL BE INSTALLED AROUND THE CONCRETE WASHOUT AREA, EXCEPT AT THE OPENING.
2. THE CONCRETE WASHOUT SIGN SHALL HAVE LETTERS AT LEAST 3 INCHES HIGH AND CONFORM TO SUBSECTION 630.02.
3. ALL MATERIALS AND LABOR TO COMPLETE THE CONCRETE WASHOUT STRUCTURE SHALL BE INCLUDED IN THE COST OF WORK AND NOT PAID FOR SEPARATELY.
4. THE BOTTOM OF EXCAVATION SHALL BE A MINIMUM OF FIVE FEET ABOVE GROUND WATER. IF NOT, IT SHALL BE LINED WITH AN IMPERMEABLE SYNTHETIC LINER THAT IS DESIGNED TO CONTROL SEEPAGE AT A MAXIMUM RATE OF 6 TO 10 CENTIMETERS PER SECOND.
5. THE PAY ITEM NUMBER FOR CONCRETE WASHOUT STRUCTURE (EACH) IS 208-00045.

CONCRETE WASHOUT STRUCTURE

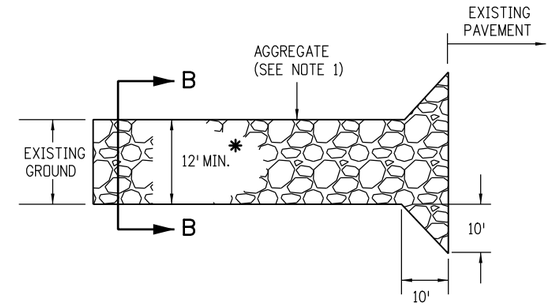

PLAN VIEW

* SHALL EXTEND FULL WIDTH OF INGRESS AND EGRESS OPERATION.

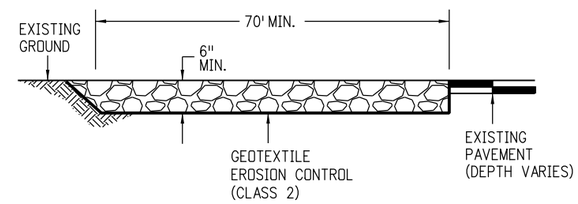

ELEVATION SECTION

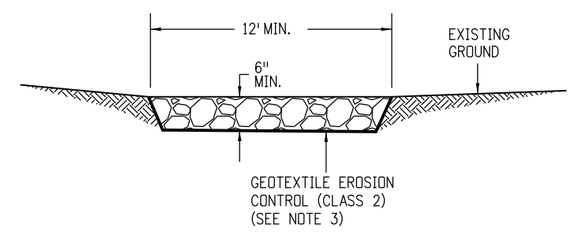

SECTION B-B

NOTES:

1. AGGREGATE SHALL CONFORM TO SUBSECTION 208.02 (K).
2. THE CONTRACTOR SHALL PROTECT CURB AND GUTTER THAT CROSSES THE ENTRANCE FROM DAMAGE. PROTECTION OF THE CURB AND GUTTER SHALL BE INCLUDED IN THE COST OF WORK AND NOT PAID FOR SEPARATELY.
3. GEOTEXTILE SHALL CONFORM TO SUBSECTION 712.08.
4. ALL MATERIALS AND LABOR TO COMPLETE THE VEHICLE TRACKING PAD SHALL BE INCLUDED IN THE COST OF WORK AND NOT PAID FOR SEPARATELY.
5. THE PAY ITEM NUMBER FOR VEHICLE TRACKING PAD (EACH) IS 208-00070.

VEHICLE TRACKING PAD

Computer File Information	
Creation Date: 07/04/12	Initials: JBK
Last Modification Date: 03/29/16	Initials: LTA
Full Path: www.coloradodot.info/business/designsupport	
Drawing File Name: 2080101011.dgn	
CAD Ver.: MicroStation V8 Scale: Not to Scale	Units: English

	Sheet Revisions	
	Date:	Comments
(R-X)	07/16/15	Deleted the two Soil Retention Blanket detail sheets. They are now standard M-216-1 Soil Retention Covering.
(R-X)	03/29/16	Minor revisions to some dimensions and General Notes.
(R-X)		
(R-X)		

Colorado Department of Transportation
4201 East Arkansas Avenue
CDOT HQ, 4th Floor
Denver, CO 80222
Phone: 303-757-9021 FAX: 303-757-9868
Division of Project Support JBK/LTA

TEMPORARY EROSION CONTROL

Issued By: Project Development Branch on July 4, 2012

STANDARD PLAN NO.

M-208-1

Sheet No. 1 of 11

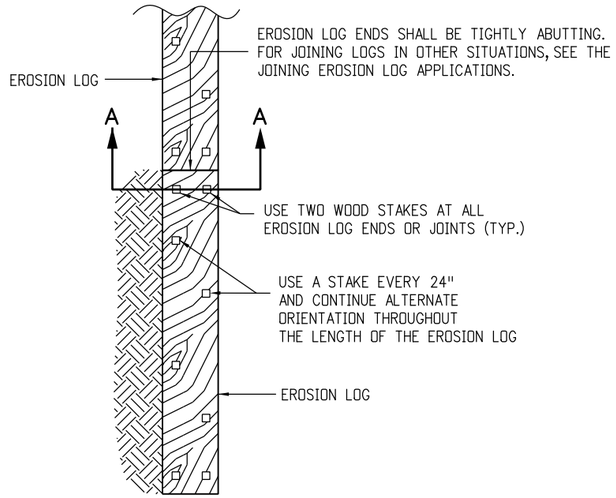

PLAN VIEW

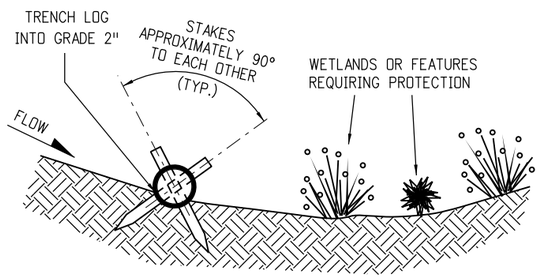

SECTION A-A

TYPICAL STAKE INSTALLATION

EROSION LOGS PAY ITEMS	
NUMBER	DESCRIPTION
208-00012	TYPE 1 (9")
208-00002	TYPE 1 (12")
208-00013	TYPE 1 (20")
208-00007	TYPE 2 (8")
208-00008	TYPE 2 (12")
208-00009	TYPE 2 (18")

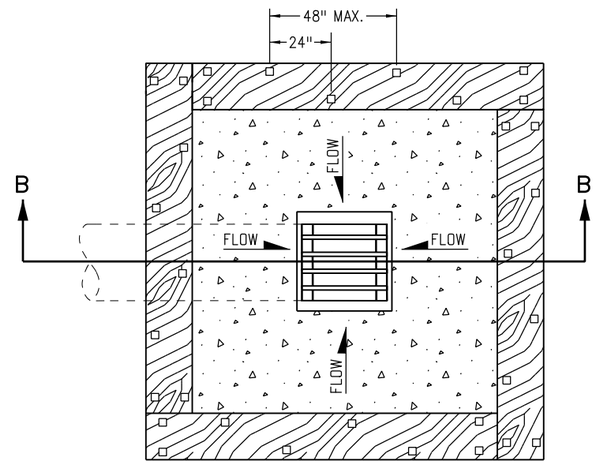

PLAN VIEW

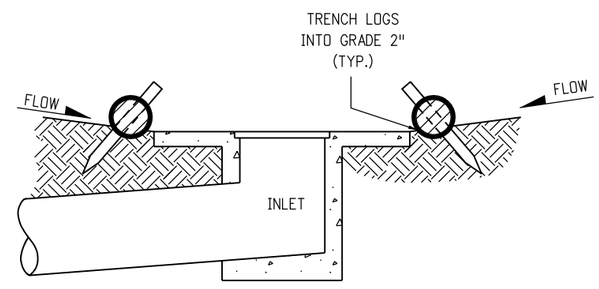

SECTION B-B

NOTE: LOCATE EROSION LOGS AT THE OUTSIDE EDGE OF THE CONCRETE APRON.

EROSION LOG FILTER AT DROP INLET

NOTE

1. STAKES SHALL BE INCLUDED IN THE COST OF THE EROSION LOGS.

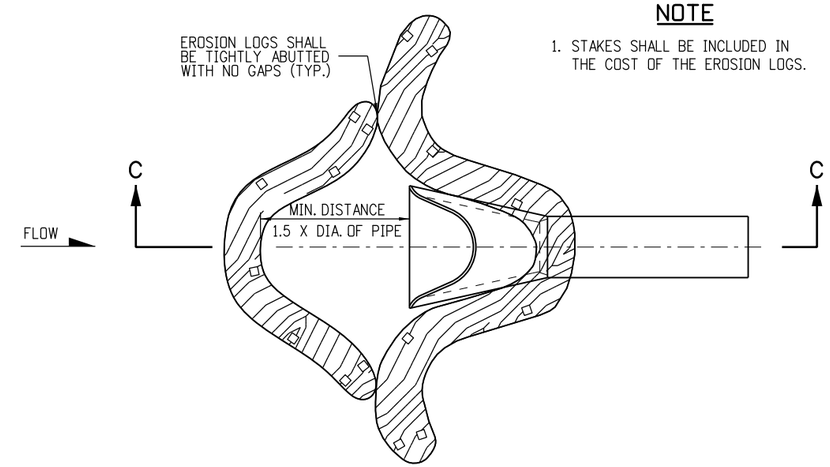

PLAN VIEW

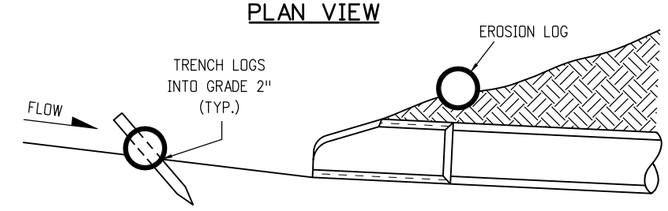

SECTION C-C
(NOT ALL LOGS SHOWN)

EROSION LOG CULVERT INLET PROTECTION

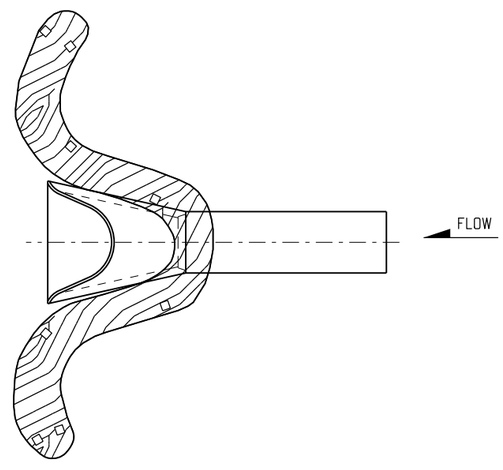

EROSION LOG CULVERT OUTLET PROTECTION

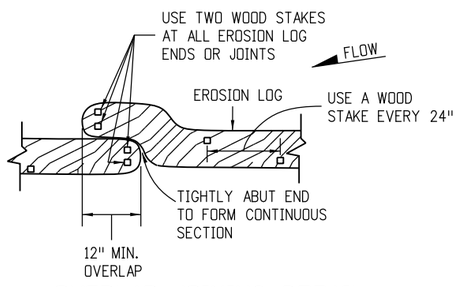

OVERLAP JOINING DETAIL

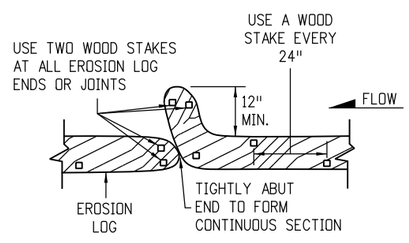

J-HOOK JOINING DETAIL

JOINING EROSION LOG APPLICATIONS

EROSION LOG APPLICATIONS

Computer File Information		
Creation Date: 07/04/12	Initials: JBK	
Last Modification Date: 03/29/16	Initials: LTA	(R-X)
Full Path: www.coloradodot.info/business/designsupport		(R-X)
Drawing File Name: 2080102011.dgn		(R-X)
CAD Ver.: MicroStation V8 Scale: Not to Scale Units: English		(R-X)

Sheet Revisions	
Date:	Comments
03/29/16	Minor revisions to some dimensions. Added Erosion Logs Pay Item table.

Colorado Department of Transportation
4201 East Arkansas Avenue
CDOT HQ, 4th Floor
Denver, CO 80222
Phone: 303-757-9021 FAX: 303-757-9868
Division of Project Support JBK/LTA

TEMPORARY EROSION CONTROL

Issued By: Project Development Branch on July 4, 2012

STANDARD PLAN NO.

M-208-1

Sheet No. 2 of 11

NOTES

1. SILT FENCE SHALL HAVE A MAXIMUM DRAINAGE AREA OF ONE-QUARTER ACRE PER 100 FEET OF SILT FENCE LENGTH; MAXIMUM SLOPE LENGTH BEHIND BARRIER IS 100 FEET; MAXIMUM GRADIENT BEHIND THE BARRIER IS 2:1.
2. SILT FENCE USED AT TOE OF SLOPE SHALL BE PLACED 5 TO 10 FEET BEYOND TOE OF SLOPE TO PROVIDE STORAGE CAPACITY.
3. SILT FENCE SHALL BE PLACED ON THE CONTOUR WITH ENDS FLARED UP SLOPE.
4. THE MAXIMUM LENGTH OF EROSION LOGS OR SILT FENCES WITHOUT A FLARED END TURNING UPSLOPE IS 150 FEET.

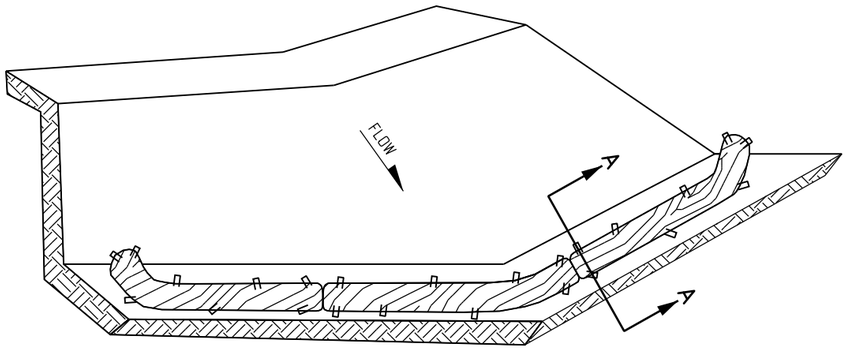

ISOMETRIC VIEW

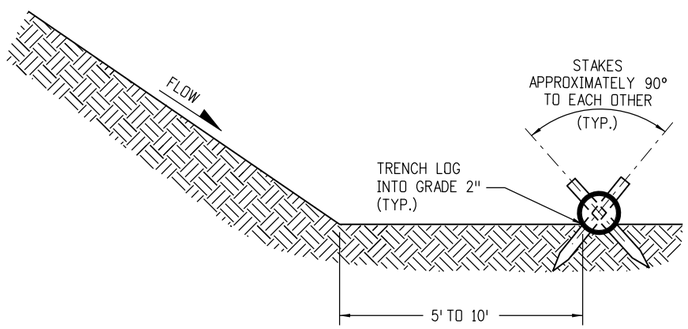

SECTION A-A

NOTES:

1. EROSION LOGS USED AT TOE OF SLOPE SHALL BE PLACED 5 TO 10 FEET BEYOND TOE OF SLOPE TO PROVIDE STORAGE CAPACITY.
2. EROSION LOGS SHALL BE PLACED ON THE CONTOUR WITH ENDS FLARED UP SLOPE.
3. SEE SHEET 2 OF 11 FOR JOINING LOGS DETAIL.

EROSION LOGS PAY ITEMS	
NUMBER	DESCRIPTION
208-00012	TYPE 1 (9")
208-00002	TYPE 1 (12")
208-00013	TYPE 1 (20")
208-00007	TYPE 2 (8")
208-00008	TYPE 2 (12")
208-00009	TYPE 2 (18")

EROSION LOG TOE OF SLOPE PROTECTION

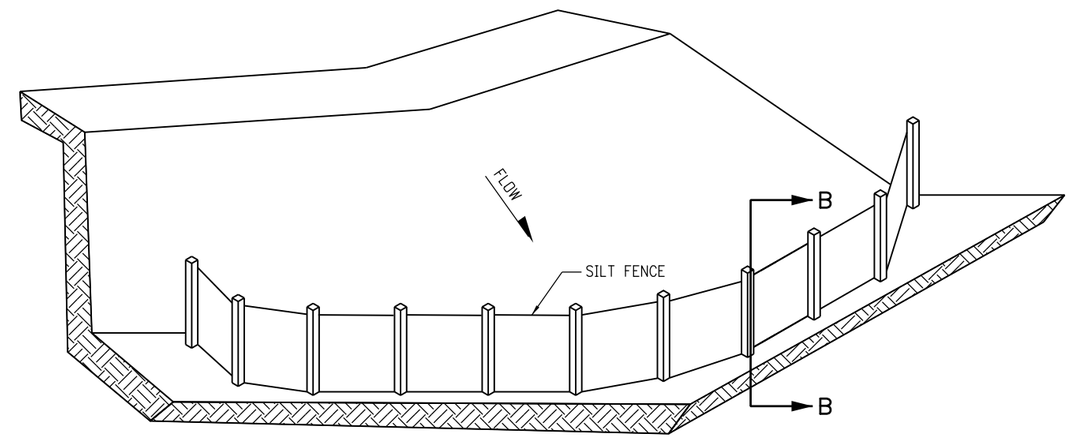

ISOMETRIC VIEW

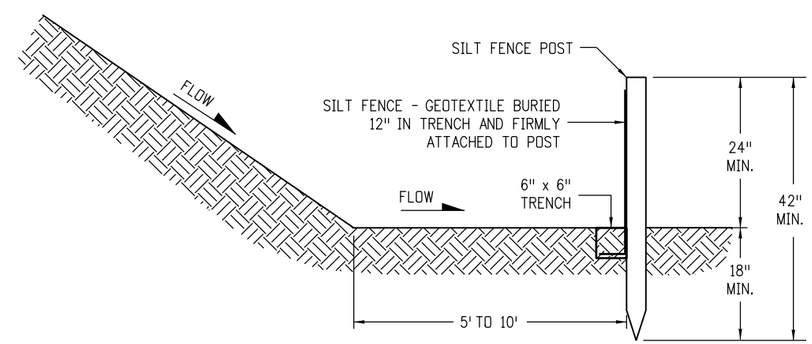

SECTION B-B

SILT FENCE TOE OF SLOPE PROTECTION

NOTE: THE PAY ITEM NUMBER FOR SILT FENCE (LF) IS 208-00020.

TOE OF SLOPE PROTECTION APPLICATIONS

Computer File Information			Sheet Revisions	
Creation Date: 07/04/12 Initials: JBK			Date:	Comments
Last Modification Date: 03/29/16 Initials: LTA	(R-X)	(R-X)	03/29/16	Minor revisions to some dimensions. Added Erosion Logs Pay Item table.
Full Path: www.coloradodot.info/business/designsupport	(R-X)	(R-X)		
Drawing File Name: 2080103011.dgn	(R-X)	(R-X)		
CAD Ver.: MicroStation V8 Scale: Not to Scale Units: English	(R-X)	(R-X)		

Colorado Department of Transportation
4201 East Arkansas Avenue
CDOT HQ, 4th Floor
Denver, CO 80222
Phone: 303-757-9021 FAX: 303-757-9868
Division of Project Support JBK/LTA

TEMPORARY EROSION CONTROL

Issued By: Project Development Branch on July 4, 2012

STANDARD PLAN NO.

M-208-1

Sheet No. 3 of 11

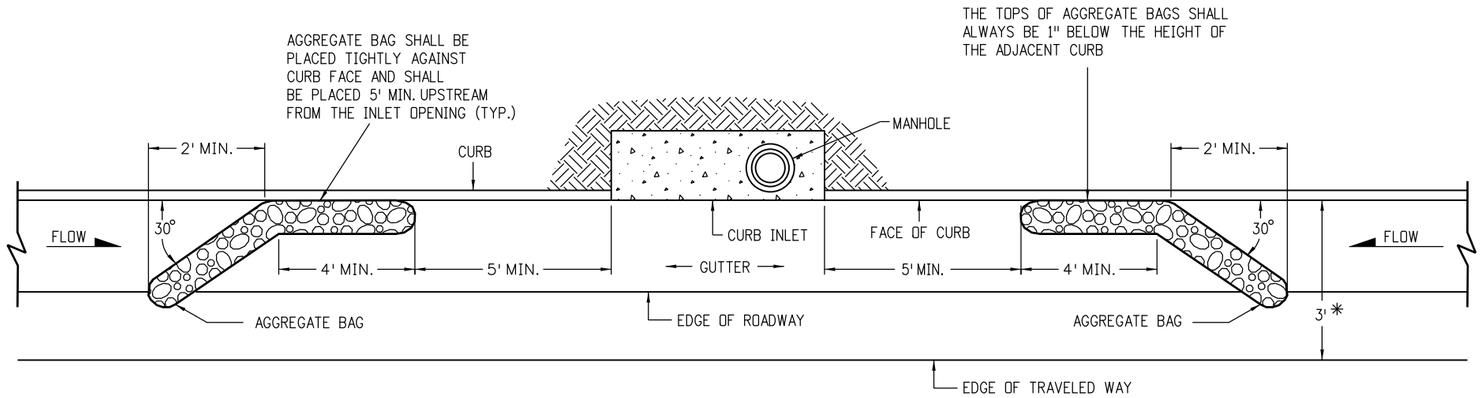

PLAN VIEW

* NOTE: USE AGGREGATE BAGS ONLY WHEN THERE IS A MINIMUM CLEARANCE OF 3 FEET FROM THE EDGE OF THE TRAVELED WAY TO THE FACE OF CURB.

LENGTH OF INLET (L)	NUMBER OF AGGREGATE BAGS UPSTREAM OF INLET
0' - 5'	1
6' -10'	2
L > 10'	3

AGGREGATE BAGS AT STORM DRAIN INLET (TYPE I)

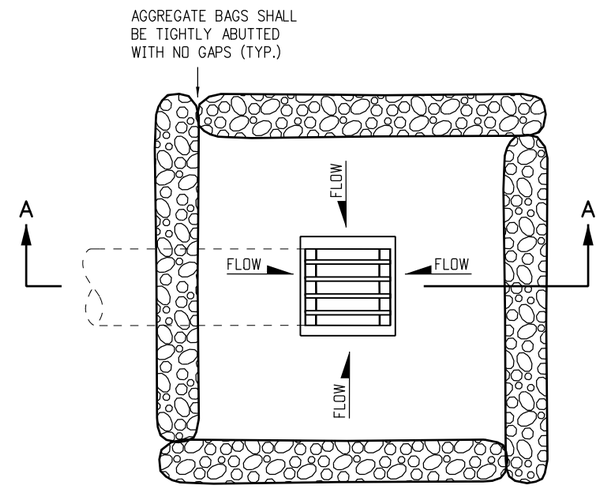

PLAN VIEW

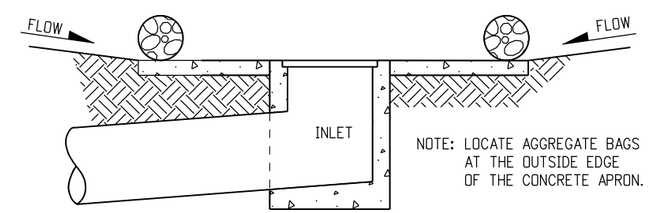

SECTION A-A

AGGREGATE BAGS AT DROP INLET

AGGREGATE BAG APPLICATIONS

NOTE: THE PAY ITEM NUMBER FOR AGGREGATE BAG (LF) IS 208-00035

Computer File Information			Sheet Revisions	
Creation Date: 07/04/12 Initials: JBK			Date:	Comments
Last Modification Date: 03/29/16 Initials: LTA	(R-X)	(R-X)	03/29/16	Added some dimensions and Note.
Full Path: www.coloradodot.info/business/designsupport	(R-X)	(R-X)		
Drawing File Name: 2080104011.dgn	(R-X)	(R-X)		
CAD Ver.: MicroStation V8 Scale: Not to Scale Units: English	(R-X)	(R-X)		

Colorado Department of Transportation
4201 East Arkansas Avenue
CDOT HQ, 4th Floor
Denver, CO 80222
Phone: 303-757-9021 FAX: 303-757-9868
Division of Project Support JBK/LTA

TEMPORARY EROSION CONTROL

Issued By: Project Development Branch on July 4, 2012

STANDARD PLAN NO.

M-208-1

Sheet No. 4 of 11

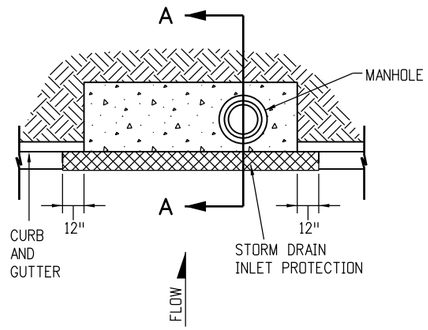

PLAN VIEW

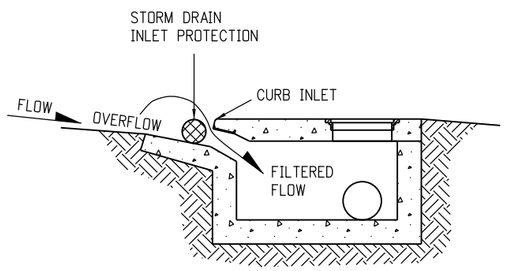

SECTION A-A

STORM DRAIN INLET PROTECTION (TYPE I)

NOTES

1. INLET PROTECTION DEVICE SHALL EXTEND 12 INCHES PAST EACH END OF THE INLET.
2. THE PAY ITEM NUMBER FOR STORM DRAIN INLET PROTECTION (TYPE I) (EACH) IS 208-00051.
3. FOR STORM DRAIN INLET TYPES I AND II, IF THERE IS A MINIMUM CLEARANCE OF 3 FEET FROM THE EDGE OF THE TRAVELED WAY TO THE FACE OF CURB, USE THE AGGREGATE BAGS AT STORM DRAIN INLET (TYPE I) DETAIL ON SHEET 4 INSTEAD.

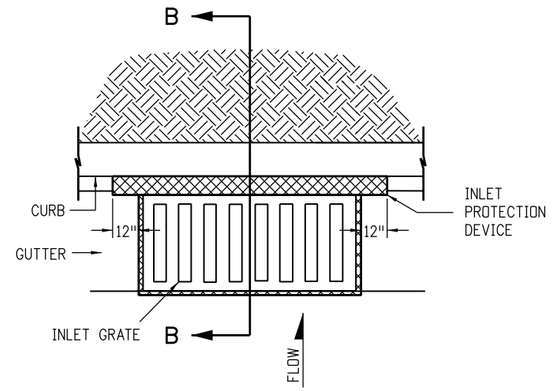

PLAN VIEW

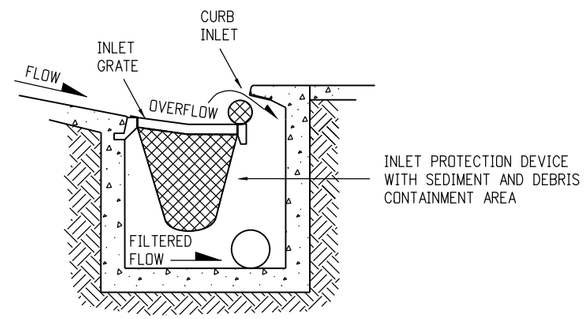

SECTION B-B

OPTION A

STORM DRAIN INLET PROTECTION (TYPE II)

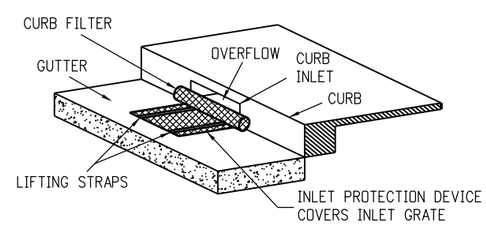

ISOMETRIC VIEW

OPTION B

STORM DRAIN INLET PROTECTION (TYPE II)

NOTE: THE PAY ITEM NUMBER FOR STORM DRAIN INLET PROTECTION (TYPE II) (EACH) IS 208-00052.

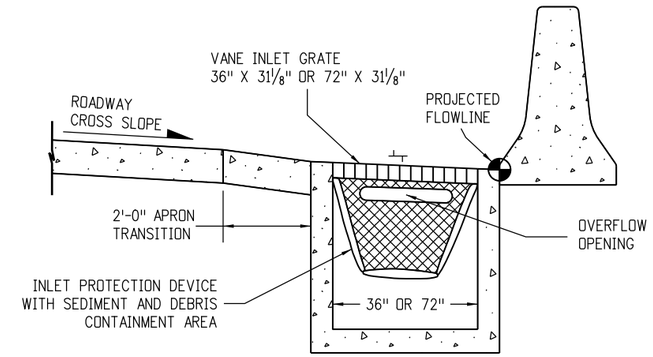

OPTION A

STORM DRAIN INLET PROTECTION (TYPE III)

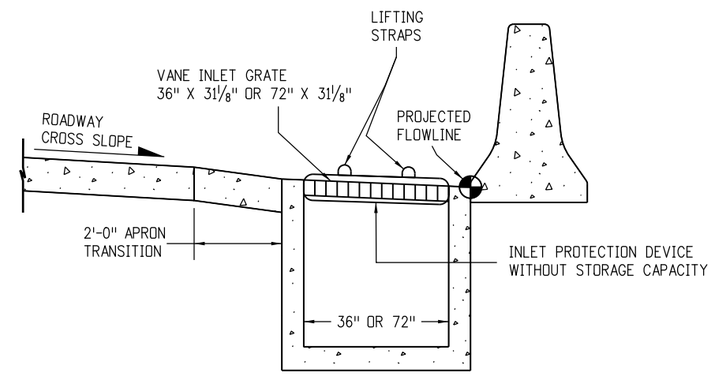

OPTION B

STORM DRAIN INLET PROTECTION (TYPE III)

NOTE: THE PAY ITEM NUMBER FOR STORM DRAIN INLET PROTECTION (TYPE III) (EACH) IS 208-00056.

STORM DRAIN INLET PROTECTION TYPES

Computer File Information		
Creation Date: 07/04/12 Initials: JBK		
Last Modification Date: 03/29/16 Initials: LTA	(R-X)	
Full Path: www.coloradodot.info/business/designsupport	(R-X)	
Drawing File Name: 2080105011.dgn	(R-X)	
CAD Ver.: MicroStation V8 Scale: Not to Scale Units: English	(R-X)	

Sheet Revisions	
Date:	Comments
03/29/16	Added Note 3.

Colorado Department of Transportation
4201 East Arkansas Avenue
CDOT HQ, 4th Floor
Denver, CO 80222
Phone: 303-757-9021 FAX: 303-757-9868
Division of Project Support JBK/LTA

TEMPORARY EROSION CONTROL

Issued By: Project Development Branch on July 4, 2012

STANDARD PLAN NO.

M-208-1

Sheet No. 5 of 11

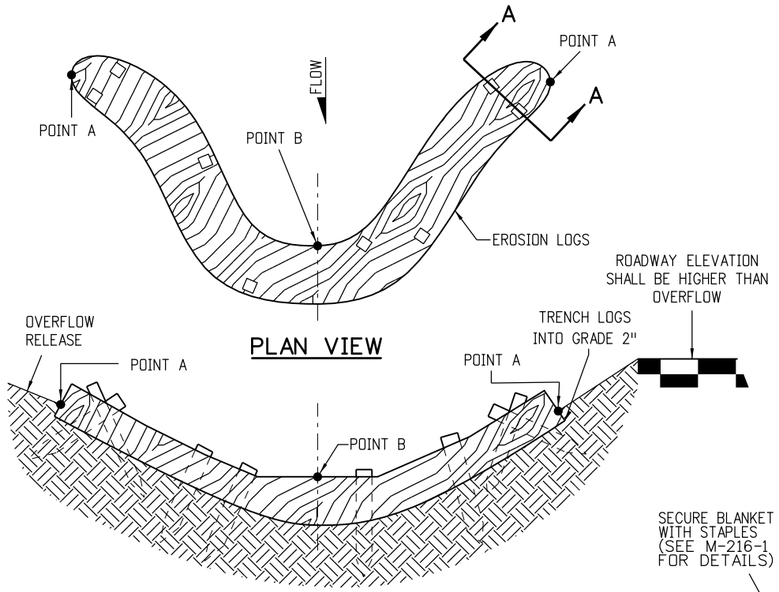

PLAN VIEW

NOTE: POINTS "A" SHALL BE A MINIMUM 4" HIGHER THAN POINT "B".

ELEVATION

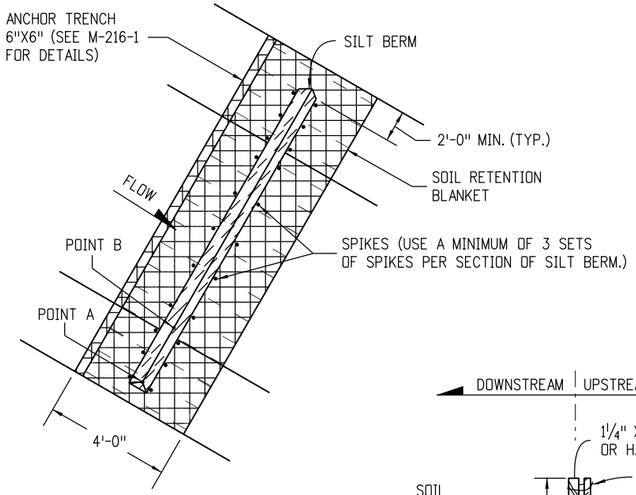

PLAN VIEW

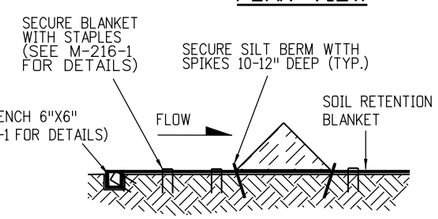

SILT BERM (1) SECTION VIEW

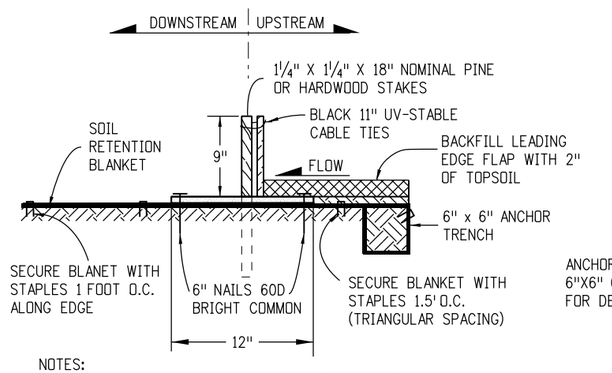

NOTES:
1. MINIMUM 4 NAILS PER SEGMENT (UPSTREAM).
2. MINIMUM 2 NAILS PER SEGMENT (DOWNSTREAM).

SILT BERM (2) SECTION VIEW

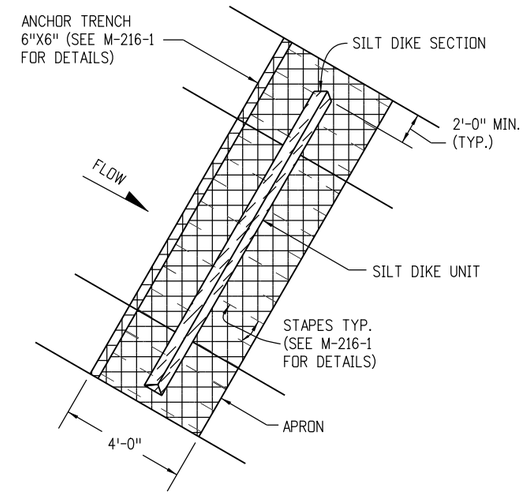

PLAN VIEW

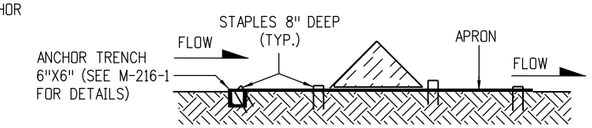

TYPICAL SECTION

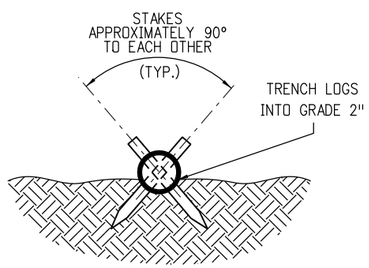

SECTION A-A

NOTES
1. EROSION LOGS SHALL BE EMBEDDED 2 INCHES INTO THE SOIL.
2. STAKES SHALL BE EMBEDDED TO A MINIMUM DEPTH OF 12 INCHES.
3. EROSION LOGS SHALL BE TIGHTLY ABUTTED WITH NO GAPS.
4. V-SHAPED TEMPORARY DITCHES SHALL NOT BE USED. DITCHES SHAL BE GRADED IN A PARABOLIC OR TRAPEZOIDAL SHAPE.

EROSION LOG INSTALLATION

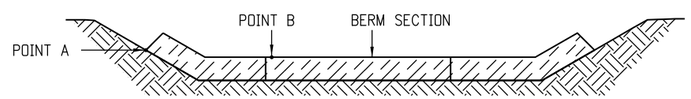

POINT "A" SHALL BE HIGHER THAN POINT "B" TO ENSURE THAT WATER FLOWS OVER THE BERM AND NOT AROUND THE ENDS.

FRONT VIEW

NOTES
1. ANCHOR SOIL RETENTION BLANKET INTO TRENCH WITH 8 INCHES MIN. STAPLES PLACED AT 1 FOOT INTERVALS ALONG EDGE.
2. FILL AND COMPACT TRENCH.
3. SECTIONS OF THE SILT BERM SHALL BE OVERLAPPED WITH NO GAPS.
4. FOR SLOPE AND CHANNEL SPACING SEE THE "SECTION VIEW ALONG DITCH FLOWLINE" DETAIL ON SHEET 11 OF 11.
5. SOIL RETENTION BLANKET SHALL ALWAYS BE REQUIRED.
6. THE PAY ITEM NUMBER FOR SILT BERM (LF) IS 208-00004.

SILT BERM INSTALLATION

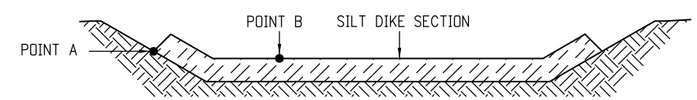

POINT "A" SHALL BE HIGHER THAN POINT "B" TO ENSURE THAT WATER FLOWS OVER THE DIKE AND NOT AROUND THE ENDS.

FRONT VIEW

NOTES
1. ANCHOR APRON INTO TRENCH WITH 8 INCH MINIMUM STAPLES PLACED AT 1 FOOT INTERVALS ALONG EDGE.
2. FILL AND COMPACT TRENCH.
3. THE APRON SHALL EXTEND A MINIMUM OF 2 FEET BEYOND EACH SIDE OF THE TRIANGLE.
4. FOR SLOPE AND CHANNEL SPACING SEE THE "SECTION VIEW ALONG DITCH FLOWLINE" DETAIL ON SHEET 11 OF 11.
5. THE PAY ITEM NUMBER FOR SILT DIKE (LF) IS 208-00001.

SILT DIKE INSTALLATION

DRAINAGE DITCH APPLICATIONS

Computer File Information		
Creation Date: 07/04/12	Initials: JBK	
Last Modification Date: 03/29/16	Initials: LTA	(R-X)
Full Path: www.coloradodot.info/business/designsupport		(R-X)
Drawing File Name: 2080106011.dgn		(R-X)
CAD Ver.: MicroStation V8 Scale: Not to Scale Units: English		(R-X)

Sheet Revisions	
Date:	Comments

Colorado Department of Transportation
4201 East Arkansas Avenue
CDOT HQ, 4th Floor
Denver, CO 80222
Phone: 303-757-9021 FAX: 303-757-9868
Division of Project Support JBK/LTA

TEMPORARY EROSION CONTROL

Issued By: Project Development Branch on July 4, 2012

STANDARD PLAN NO.

M-208-1

Sheet No. 6 of 11

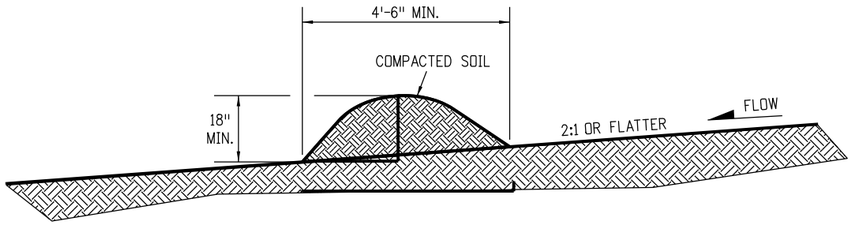

NOTES:

1. BERMS SHALL HAVE A HEIGHT OF 18 INCHES, SIDE SLOPES OF 2:1 OR FLATTER AND A MINIMUM BASE WIDTH OF 4'-6" FEET.
2. BERMS SHALL BE USED TO INTERCEPT AND DIVERT DRAINAGE TO A DESIGNATED OUTLET.
3. BERMS SHALL NOT BE USED WHERE DRAINAGE AREA EXCEEDS 10 ACRES.
4. BERMS SHALL BE CONSTRUCTED OUT OF MATERIAL COMPACTED WITH AT LEAST A MINIMUM OF ONE WHEEL ROLLED COMPACTION.
5. THE PAY ITEM NUMBER FOR TEMPORARY BERM (LF) IS 208-00300.
6. BERMS SHALL BE CONSTRUCTED OUT OF ACCEPTABLE MATERIAL THAT CAN BE COMPACTED AND RECEIVE AT A MINIMUM HEAVY EQUIPMENT WHEEL ROLLED COMPACTION.

TEMPORARY BERM

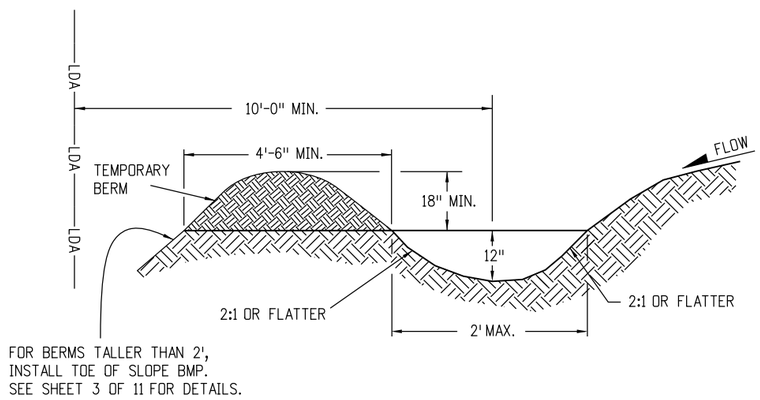

NOTES

1. TEMPORARY DIVERSION DITCHES SHALL BE CONSTRUCTED ACROSS THE SLOPE TO INTERCEPT RUNOFF AND DIRECT IT TO A STABLE OUTLET OR SEDIMENT TRAP.
2. USE THE TEMPORARY DIVERSION DITCH IMMEDIATELY ABOVE A NEW CUT, FILL SLOPE, OR AROUND THE PERIMETER OF A DISTURBED AREA.
3. THE GRADIENT ALONG THE FLOW PATH SHALL HAVE A POSITIVE GRADE TO ASSURE DRAINAGE, BUT SHALL NOT BE SO STEEP AS TO RESULT IN EROSION DUE TO HIGH VELOCITY.
4. THE DIVERSION FLOWLINE SHALL ALWAYS BE LOCATED A MINIMUM 10 FEET FROM THE OUTSIDE LIMITS OF DISTURBED AREA BOUNDARY.
5. THE PAY ITEM NUMBER FOR TEMPORARY DIVERSION (LF) IS 208-00301.

TEMPORARY DIVERSION

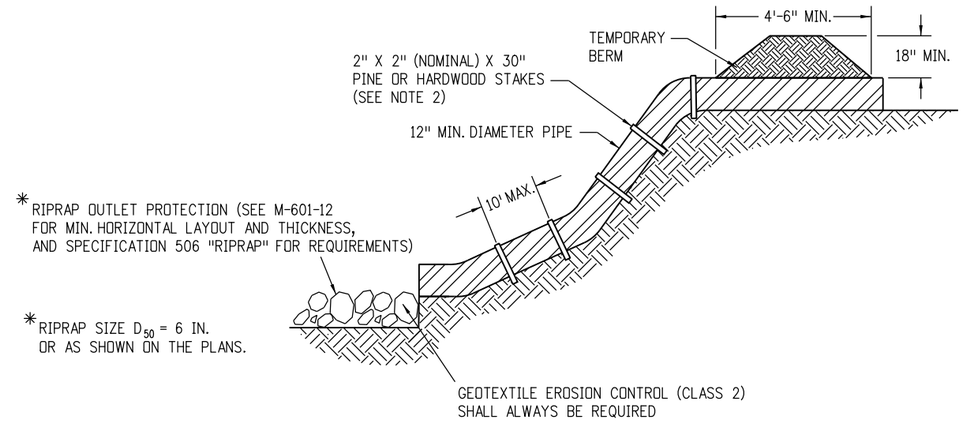

NOTES

1. ANCHOR SIZE VARIES ACCORDING TO PIPE SIZE
2. TO SECURE THE PIPE, DRIVE STAKES INTO GROUND, THEN TIE A 12 GUAGE WIRE BETWEEN THEM ABOVE AND ACROSS THE PIPE'S WIDTH.
3. THE OUTLET SHALL BE ALIGNED WITH THE FLOW DIRECTION OF THE EXISTING GRADE. PERPENDICULAR DISCHARGE TO A CHANNEL SHALL NOT BE ACCEPTABLE.
4. THE GRADE AROUND THE INLET TO THE PIPE SHALL BE COMPACTED.
5. THE PAY ITEM NUMBER FOR TEMPORARY SLOPE DRAINS (LF) IS 208-00060.

TEMPORARY SLOPE DRAINS

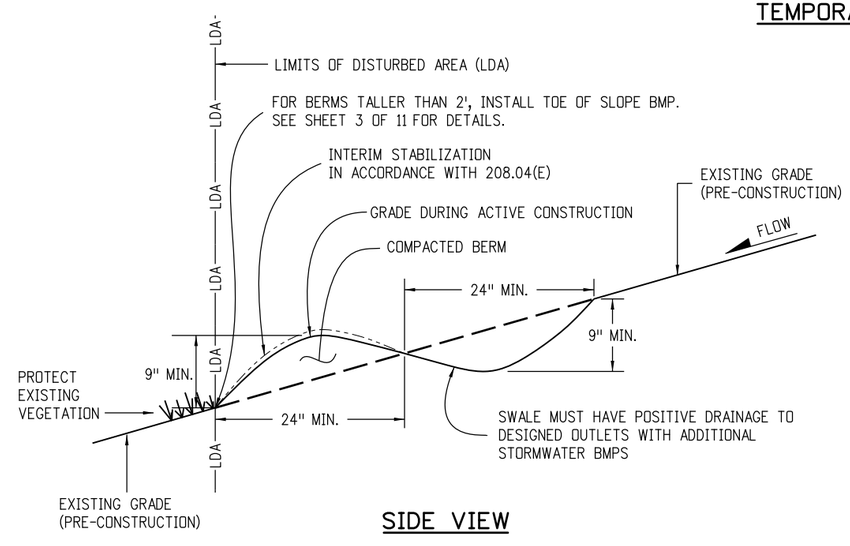

SIDE VIEW

NOTES:

1. BERMS CAN ONLY BE USED IF CONDITIONS ALLOW UNINTERRUPTED POSITIVE GRADE (MAXIMUM GRADIENT 3%) TO AN OUTLET PROTECTED WITH ADDITIONAL BMPS.
2. MAXIMUM DRAINAGE AREA FOR EACH OUTLET FROM THE SWALE SHALL BE LIMITED TO 2 ACRES.
3. CONTRACTOR SHALL SALVAGE TOPSOIL AND PLACE AFTER BERM IS REMOVED FOR FINAL SEEDING OF ALL DISTURBED AREAS.
4. ALL ACTIVITIES REQUIRED TO ACCOMPLISH TEMPORARY BERM (EXCLUDING SURFACE MULCHING) SHALL BE INCLUDED IN THE COST OF WORK AND WILL NOT BE PAID FOR SEPARATELY.
5. BERMS SHALL BE CONSTRUCTED OUT OF ACCEPTABLE MATERIAL THAT CAN BE COMPACTED AND RECEIVE AT A MINIMUM HEAVY EQUIPMENT WHEEL ROLLED COMPACTION.
6. THE PAY ITEM NUMBER FOR TEMPORARY BERM (LF) IS 208-00300.

TEMPORARY BERM (AT EDGE OF DISTURBANCE)

GRADING APPLICATIONS

Computer File Information		
Creation Date: 07/04/12	Initials: JBK	
Last Modification Date: 03/29/16	Initials: LTA	(R-X)
Full Path: www.coloradodot.info/business/designsupport		(R-X)
Drawing File Name: 2080107011.dgn		(R-X)
CAD Ver.: MicroStation V8 Scale: Not to Scale Units: English		(R-X)

Sheet Revisions	
Date:	Comments
03/29/16	Revisions to some dimensions and Notes.

Colorado Department of Transportation
4201 East Arkansas Avenue
CDOT HQ, 4th Floor
Denver, CO 80222
Phone: 303-757-9021 FAX: 303-757-9868
Division of Project Support JBK/LTA

TEMPORARY EROSION CONTROL

Issued By: Project Development Branch on July 4, 2012

STANDARD PLAN NO.

M-208-1

Sheet No. 7 of 11

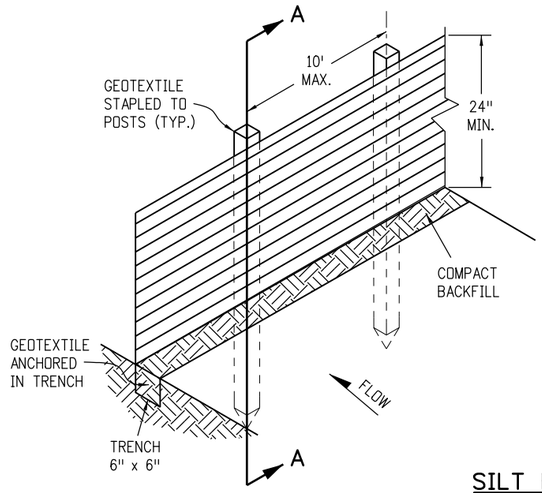

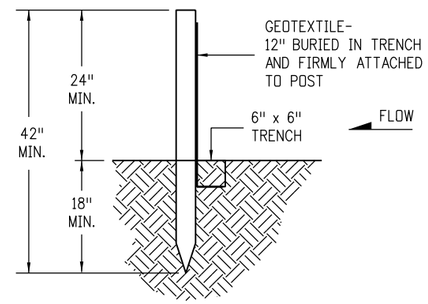

SECTION A-A

SILT FENCE

NOTES

1. GEOTEXTILE SHALL BE ATTACHED TO WOOD POSTS WITH THREE OR MORE STAPLES PER POST. STAPLES SHALL BE HEAVY DUTY WIRE AND AT LEAST 1" INCH LONG
2. WOOD POST SHALL BE 1½" X 1½" NOMINAL.
3. THE PAY ITEM NUMBER FOR SILT FENCE (LF) IS 208-00020.
4. THE SILT FENCE SHALL BE PLACED ON THE CONTOUR (AT THE SAME ELEVATION ±6"). THE ENDS SHALL BE FLARED UP SLOPE (MINIMUM ELEVATION GAIN OF 18").

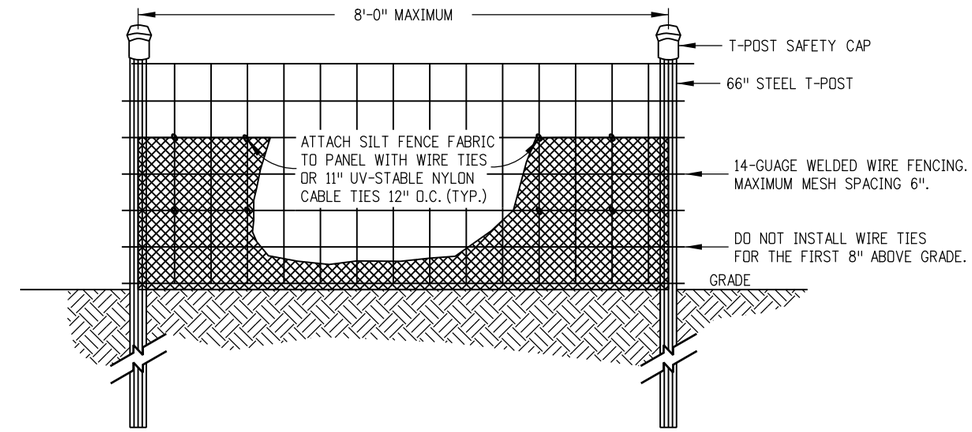

ELEVATION VIEW

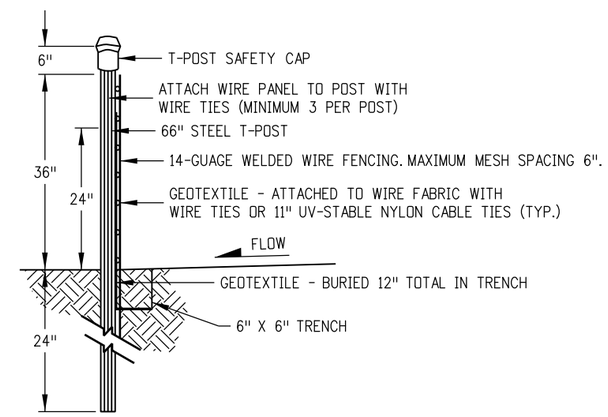

SIDE VIEW

NOTES

1. THE ENDS OF THE SILT FENCE FABRIC SHALL BE JOINED TOGETHER BY WRAPPING APPROX. 6 INCHES OF EACH END AROUND A WOODEN POST ONE FULL TURN, THEN SECURED ALONG THE POST WITH 6 HEAVY DUTY WIRE STAPLES AT LEAST 1 INCH LONG.
2. SILT FENCES SHALL NOT BE USED FOR CHECK DAMS.
3. THE PAY ITEM NUMBER FOR SILT FENCE (REINFORCED) (LF) IS 208-00021.

SILT FENCE (REINFORCED)

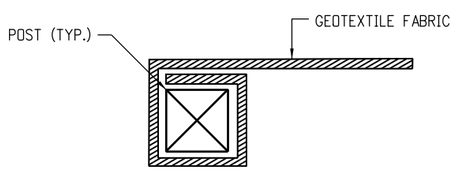

END SECTION DETAIL (PLAN VIEW)

NOTE

1. THE END OF THE SILT FENCE FABRIC SHALL BE WRAPPED APPROX. 6 INCHES AROUND A WOODEN POST ONE FULL TURN, THEN SECURED ALONG THE POST WITH 6 HEAVY DUTY WIRE STAPLES AT LEAST 1 INCH LONG.

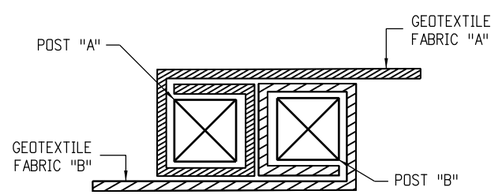

JOINING SECTION DETAIL (PLAN VIEW)

NOTES

1. THE ENDS OF THE SILT FENCE FABRIC SHALL BE JOINED TOGETHER BY WRAPPING APPROX. 6 INCHES OF EACH END AROUND A WOODEN POST ONE FULL TURN, THEN SECURED ALONG THE POST WITH 6 HEAVY DUTY WIRE STAPLES AT LEAST 1 INCH LONG.
2. POSTS SHALL BE TIGHTLY ABUTTED WITH NO GAPS TO PREVENT POTENTIAL FLOW-THROUGH OF SEDIMENT AT JOINT.

SILT FENCE APPLICATIONS

Computer File Information		
Creation Date: 07/04/12	Initials: JBK	
Last Modification Date: 03/29/16	Initials: LTA	(R-X)
Full Path: www.coloradodot.info/business/designsupport		(R-X)
Drawing File Name: 2080108011.dgn		(R-X)
CAD Ver.: MicroStation V8 Scale: Not to Scale Units: English		(R-X)

Sheet Revisions	
Date:	Comments
03/29/16	Minor revisions to some dimensions and Notes.

Colorado Department of Transportation
4201 East Arkansas Avenue
CDOT HQ, 4th Floor
Denver, CO 80222
Phone: 303-757-9021 FAX: 303-757-9868
Division of Project Support JBK/LTA

TEMPORARY EROSION CONTROL

Issued By: Project Development Branch on July 4, 2012

STANDARD PLAN NO.

M-208-1

Sheet No. 8 of 11

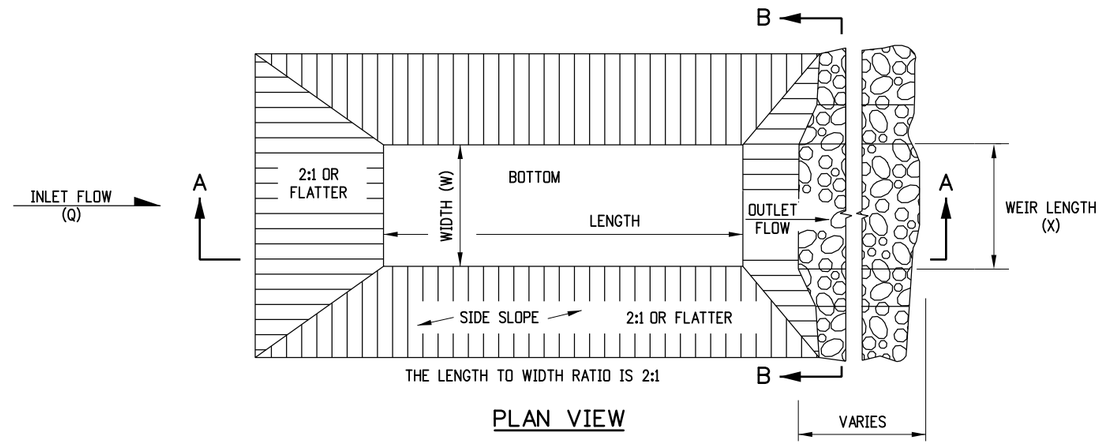

PLAN VIEW

NOTES

1. THE MAXIMUM DRAINAGE AREA IS 5 ACRES.
2. THE MAXIMUM STRUCTURE LIFE IS 2 YEARS.
3. THE STORAGE AREA IS 1800 CUBIC FEET PER ACRE.
4. THE MAXIMUM EMBANKMENT HEIGHT SHALL BE 5 FT. MEASURED ON THE DOWNSTREAM SIDE.
5. THE LENGTH/WIDTH RATIO MAY BE ADJUSTED TO MEET SITE CONDITIONS WHEN APPROVED BY THE ENGINEER.
6. WIDTH (W) OF SEDIMENT TRAP IS APPROXIMATELY EQUAL TO THE WEIR LENGTH (X).
7. SEDIMENT TRAP DESIGN SHALL BE APPROVED BY THE ENGINEER.
8. THE DOWN GRADE FROM WEIR SHALL BE STABLE AND NON-ERODIABLE.
9. THE PAY ITEM NUMBER FOR SEDIMENT TRAP (LF) IS 208-00033.

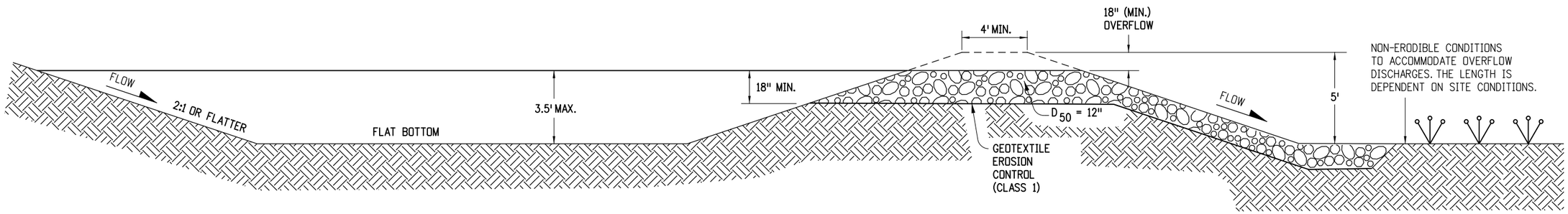

SECTION A-A

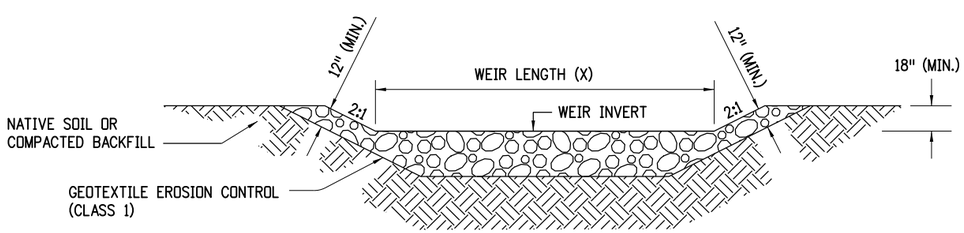

SECTION B-B

DRAINAGE AREA (ACRES)	WEIR LENGTH (FEET)
1	4
2	6
3	8
4	10
5	12

WEIR LENGTH TABLE

SEDIMENT TRAP

Computer File Information	
Creation Date: 07/04/12 Initials: JBK	
Last Modification Date: 03/29/16 Initials: LTA	(R-X)
Full Path: www.coloradodot.info/business/designsupport	(R-X)
Drawing File Name: 2080109010.dgn	(R-X)
CAD Ver.: MicroStation V8 Scale: Not to Scale Units: English	(R-X)

Sheet Revisions	
Date:	Comments
03/29/16	Minor revisions to some dimensions.

Colorado Department of Transportation
4201 East Arkansas Avenue
CDOT HQ, 4th Floor
Denver, CO 80222
Phone: 303-757-9021 FAX: 303-757-9868
Division of Project Support JBK/LTA

TEMPORARY EROSION CONTROL

Issued By: Project Development Branch on July 4, 2012

STANDARD PLAN NO.

M-208-1

Sheet No. 9 of 11

NOTES

1. STAKES SHALL BE WOOD AND SHALL BE 2" X 2" X 30" NOMINAL.
2. EROSION BALES SHALL BE 18" X 18" X 36".
3. EROSION BALES SHALL BE ENTRENCHED 4 IN. MINIMUM INTO THE SOIL, THIGHTLY ABUTTED WITH NO GAPS, STAKED, AND BACKFILLED AROUND THE ENTIRE OUTSIDE PERIMETER.
4. EROSION BALES CANNOT BE USED FOR CHECK DAMS.
5. THE PAY ITEM NUMBER FOR EROSION BALES (WEED FREE) (EA) IS 208-00011.

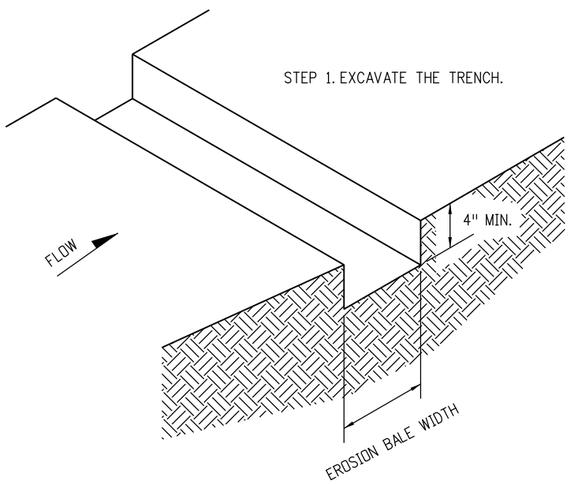

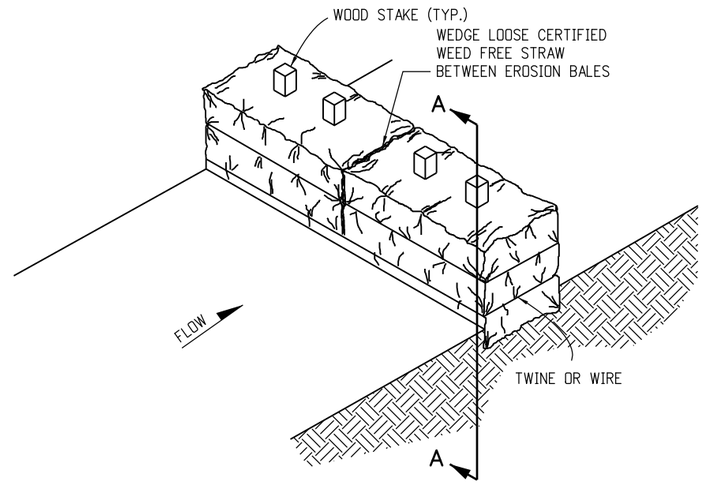

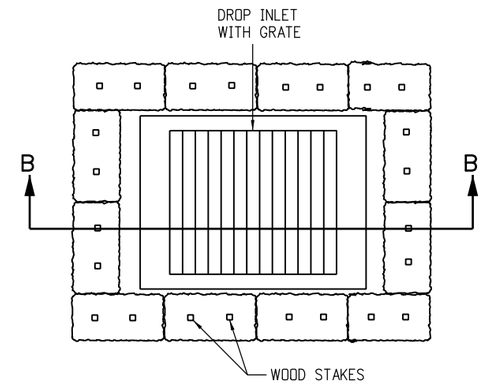

PLAN VIEW

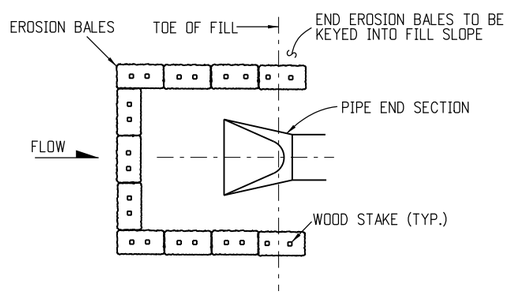

PLAN VIEW

EROSION BALE CULVERT INLET PROTECTION

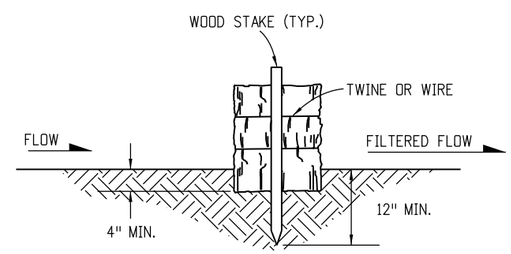

SECTION A-A

EROSION BALE TRENCHING AND STAKING

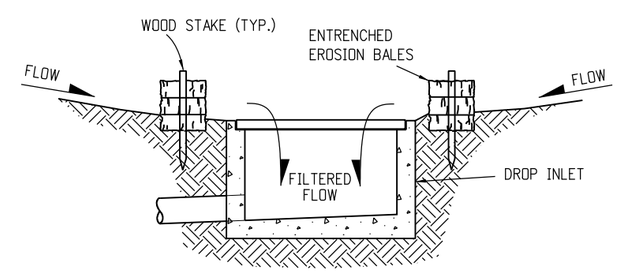

SECTION B-B

EROSION BALE FILTER AT DROP INLET

EROSION BALE APPLICATIONS

Computer File Information		
Creation Date: 07/04/12	Initials: JBK	
Last Modification Date: 03/29/16	Initials: LTA	(R-X)
Full Path: www.coloradodot.info/business/designsupport		(R-X)
Drawing File Name: 20801010011.dgn		(R-X)
CAD Ver.: MicroStation V8 Scale: Not to Scale Units: English		(R-X)

Sheet Revisions	
Date:	Comments
03/29/16	Minor revisions to some dimensions.

Colorado Department of Transportation
4201 East Arkansas Avenue
CDOT HQ, 4th Floor
Denver, CO 80222
Phone: 303-757-9021 FAX: 303-757-9868
Division of Project Support JBK/LTA

TEMPORARY EROSION CONTROL

Issued By: Project Development Branch on July 4, 2012

STANDARD PLAN NO.

M-208-1

Sheet No. 10 of 11

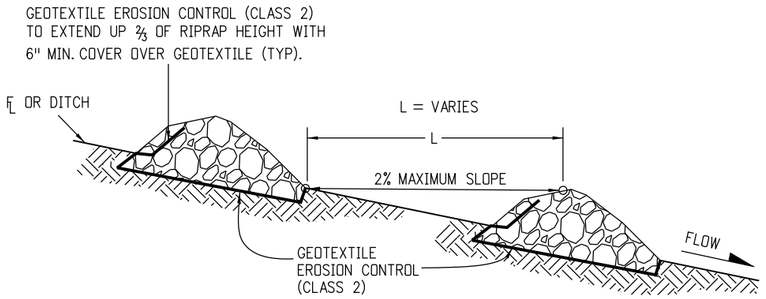

SECTION VIEW ALONG DITCH FLOWLINE

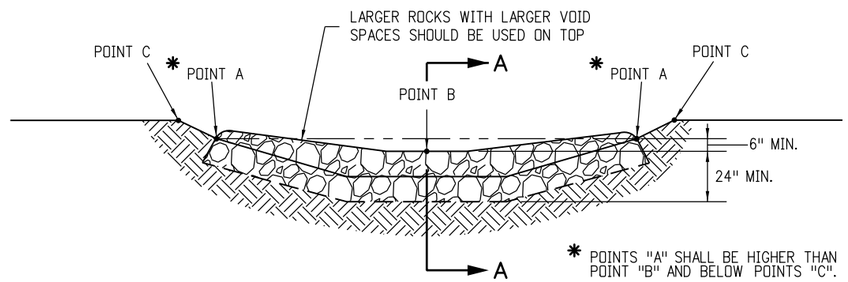

TYPICAL SECTION VIEW

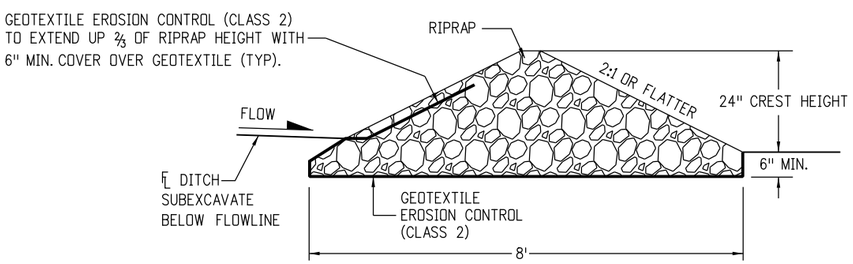

SECTION A-A

NOTES:

1. RIPRAP SIZE D_{50} = 6" OR AS SHOWN ON THE PLANS.
2. THE GEOTEXTILE EROSION CONTROL SHALL BE CLASS 2 AND CONFORM TO THE REQUIREMENTS OF SUBSECTION 712.08.
3. THE ENDS OF RIPRAP CHECK DAM SHALL BE A MINIMUM OF 6 IN. HIGHER THAN CENTER OF CHECK DAM.
4. FOR USE AS TEMPORARY CHECK DAMS ONLY AND NOT FOR PERMANENT INSTALLATIONS.
5. THE PAY ITEM NUMBER FOR ROCK CHECK DAM (EA) IS 208-00041.

ROCK CHECK DAM

Computer File Information		
Creation Date: 07/04/12	Initials: JBK	
Last Modification Date: 03/29/16	Initials: LTA	R-X
Full Path: www.coloradodot.info/business/designsupport		R-X
Drawing File Name: 20801011011.dgn		R-X
CAD Ver.: MicroStation V8 Scale: Not to Scale	Units: English	R-X

Sheet Revisions	
Date:	Comments
03/29/16	Minor revisions to some Notes.

Colorado Department of Transportation
4201 East Arkansas Avenue
CDOT HQ, 4th Floor
Denver, CO 80222
Phone: 303-757-9021 FAX: 303-757-9868
Division of Project Support JBK/LTA

TEMPORARY EROSION CONTROL

Issued By: Project Development Branch on July 4, 2012

STANDARD PLAN NO.

M-208-1

Sheet No. 11 of 11

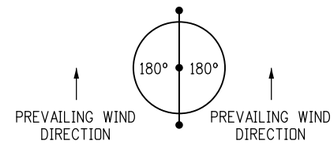

GUYING PATTERN FOR DECIDUOUS TREE PLANTING

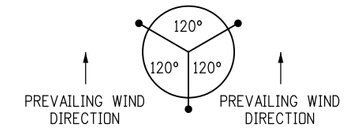

NOTE: FOR TREES ON 4:1 OR STEEPER SLOPES, PLACE TWO GUYS UPSLOPE AND ONE DOWN SLOPE. OTHERWISE, PLACE FOR PREVAILING WIND.

GUYING PATTERN FOR EVERGREEN TREE PLANTING

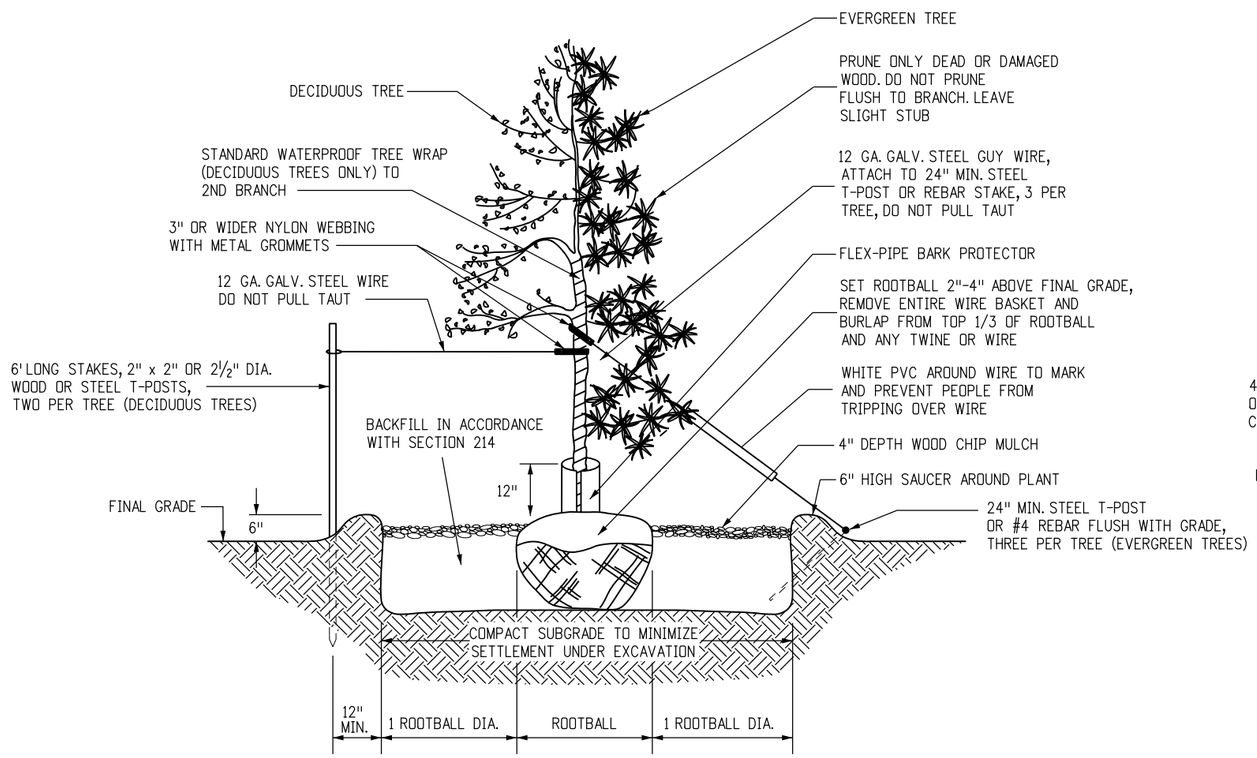

DECIDUOUS AND EVERGREEN TREE PLANTING AND GUYING DETAIL

(GUY AND STAKE DECIDUOUS TREES 2" AND LARGER CALIPER AND EVERGREEN TREES OVER 4' HEIGHT.)
NOT TO SCALE

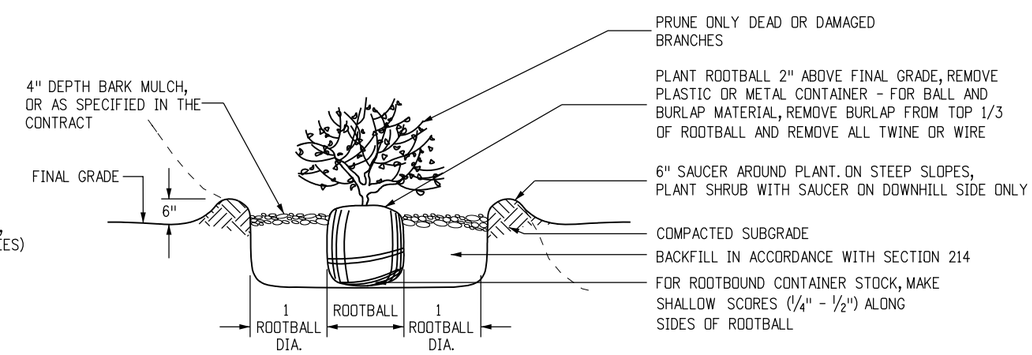

SHRUB PLANTING DETAIL

NOT TO SCALE

Computer File Information		
Creation Date: 07/04/12	Initials: DD	
Last Modification Date: 07/04/12	Initials: LTA	(R-X)
Full Path: www.coloradodot.info/business/designsupport		(R-X)
Drawing File Name: 214010101.dgn		(R-X)
CAD Ver.: MicroStation V8 Scale: Not to Scale Units: English		(R-X)

Sheet Revisions	
Date:	Comments

Colorado Department of Transportation
4201 East Arkansas Avenue
Denver, Colorado 80222
Phone: (303) 757-9083
Fax: (303) 757-9820
Project Development Branch DD/LTA

PLANTING DETAILS

Issued By: Project Development Branch July 4, 2012

STANDARD PLAN NO.
M-214-1
Sheet No. 1 of 1

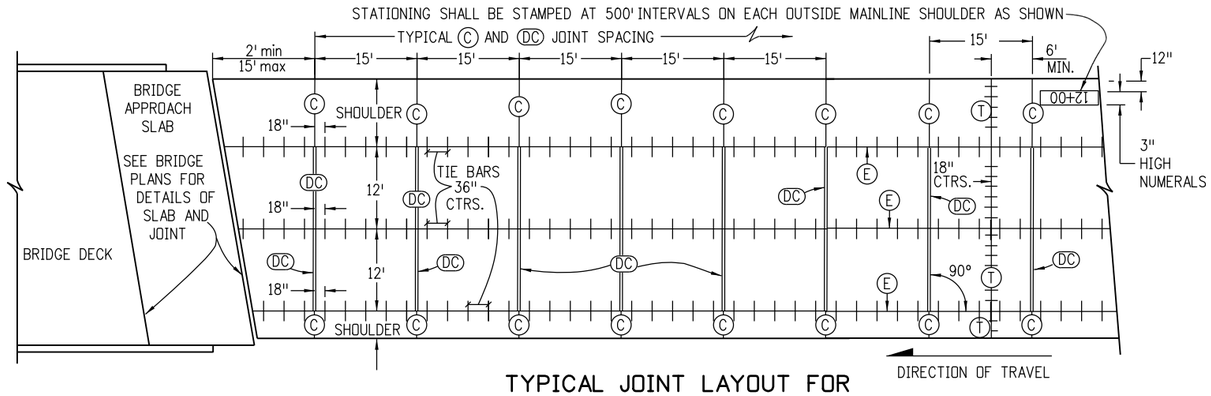

TYPICAL JOINT LAYOUT FOR CONCRETE ROADWAY WITH CONCRETE SHOULDERS

GENERAL NOTES

1. THIS STANDARD PLAN DOES NOT APPLY TO THIN CONCRETE OVERLAYS (WHITETOPPING).
2. LOCATE (T) JOINT AT A (C) JOINT OR A MINIMUM OF 6 FT. FROM A (C) JOINT.
3. THIS JOINT LAYOUT SHALL BE USED AS A STANDARD OF THE JOINT LAYOUT FOR THE PROJECT. IF THE CONTRACTOR PROPOSES VARIATIONS FROM THIS STANDARD OR THE PROJECT HAS UNUSUAL OR IRREGULAR CONDITIONS NOT COVERED HEREIN, THE CONTRACTOR SHALL PREPARE A PAVEMENT JOINT LAYOUT FOR APPROVAL BY THE ENGINEER. SLABS 14 FT. IN WIDTH SHALL BE CONSTRUCTED ONLY WHERE DESIGNATED ON THE PLANS.
4. ON MULTILANE DIVIDED HIGHWAYS, THE MULTILANE DIRECTIONAL PAVEMENT AND BOTH SHOULDERS SHALL BE PLACED WITH (E) LONGITUDINAL SAWED CONTRACTION JOINTS.
5. ON MULTILANE DIVIDED HIGHWAYS SEPARATED BY A CONCRETE BARRIER, A (D) JOINT SHALL BE CONSTRUCTED AT ONE OF THE BARRIER FACES.
6. (D) JOINTS SHALL BE CONSTRUCTED BETWEEN THE TWO OPPOSING DIRECTIONS OF TRAVEL ON A MULTILANE UNDIVIDED HIGHWAY WHEN ALL OF THE FOLLOWING APPLY:
   A. PAVEMENT IS CONTINUOUS ACROSS BOTH DIRECTIONS OF TRAVEL.
   B. THERE IS NO MEDIAN BARRIER.
   C. THE WIDTH OF THE PAVEMENT IN ONE DIRECTION IS GREATER THAN 80 FEET.
7. ON VARIABLE WIDTH SLABS, THE 2 FT. OR 4 FT. END OF SLAB WIDTH DIMENSION MAY VARY ±6 INCHES.
8. (L) JOINTS ARE TO BE USED WHEN A TRAFFIC LANE IS ADDED SEPARATELY, OR FOR TAPERS, OR FOR SPEED CHANGE LANES. ALTERNATIVE LONGITUDINAL JOINT LOCATIONS AT SPEED CHANGE LANES MAY BE USED IF APPROVED.
9. WHERE (DC) JOINTS ARE SHOWN IN THE SHOULDER, THE DOWEL BARS WILL BE PLACED ON 12" CENTERS STARTING 6" FROM THE ROADWAY (E) JOINT.

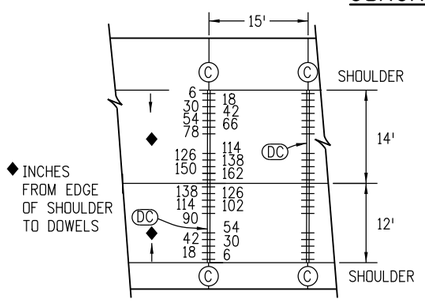

DOWEL BAR DETAIL FOR (DC) JOINT WITH 14 FT. AND 12 FT. LANES

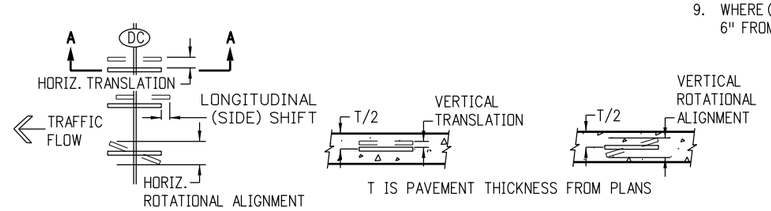

PLAN VIEW

SHOWING HORIZ. TRANSLATION, LONGITUDINAL (SIDE) SHIFT AND HORIZ. ROTATIONAL ALIGNMENT

SECTION A-A

SHOWING VERTICAL TRANSLATION TOLERANCE

SECTION A-A

SHOWING VERTICAL ROTATIONAL ALIGNMENT

DETAILS ILLUSTRATING DOWEL PLACEMENT TOLERANCES

SEE SUBSECTION 412.13(b)2 FOR ALLOWED TOLERANCE VALUES.

JOINT LEGEND

(SEE SHEET 5 FOR JOINT DETAILS)

- (C) TRANSVERSE CONTRACTION
- (D) LONGITUDINAL CONSTRUCTION
- (DC) DOWELED TRANSVERSE CONTRACTION
- (L) (E) LONGITUDINAL CONSTRUCTION OR LONGITUDINAL CONTRACTION
- (T) TRANSVERSE CONSTRUCTION

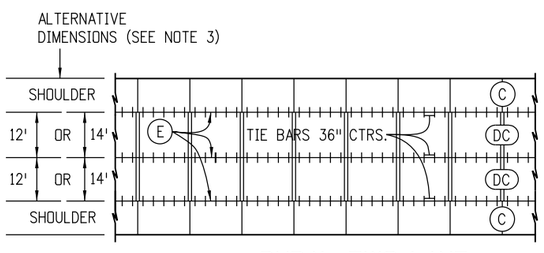

RURAL TWO-LANE

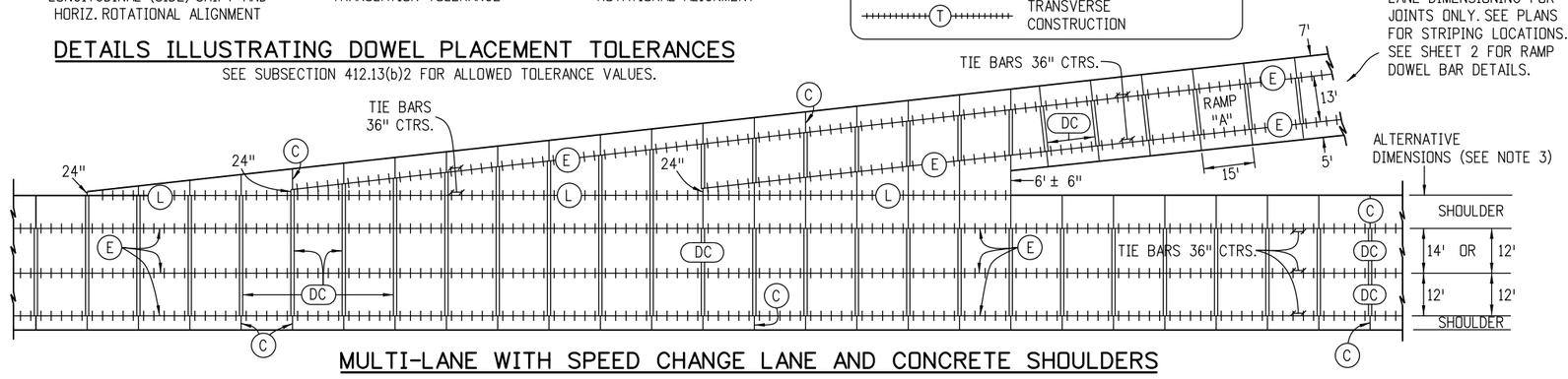

MULTI-LANE WITH SPEED CHANGE LANE AND CONCRETE SHOULDERS

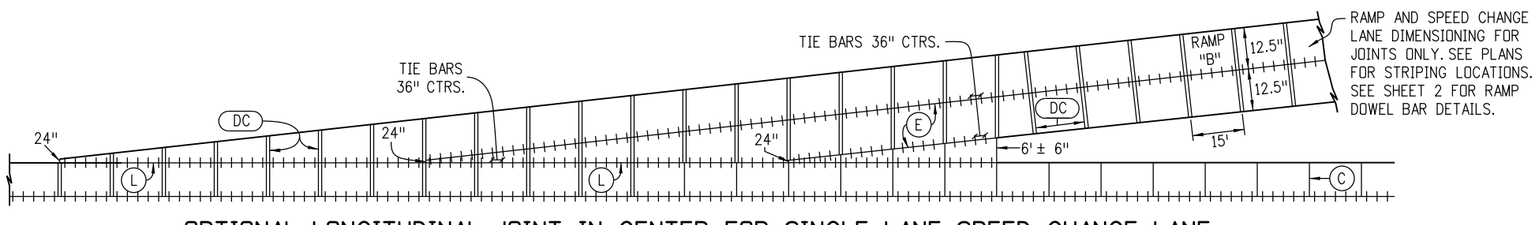

OPTIONAL LONGITUDINAL JOINT IN CENTER FOR SINGLE LANE SPEED CHANGE LANE

Computer File Information		
Creation Date: 07/04/12	Initials: DD	
Last Modification Date: 07/24/12	Initials: LTA	(R-X)
Full Path: www.coloradodot.info/business/designsupport		(R-X)
Drawing File Name: 412010105.dgn		(R-X)
CAD Ver.: MicroStation V8 Scale: Not to Scale Units: English		(R-X)

Sheet Revisions	
Date:	Comments
07/24/12	Changed Tie Bar spacing from 30" to 36".

Colorado Department of Transportation
4201 East Arkansas Avenue
CDOT HQ, 4th Floor
Denver, CO 80222
Phone: 303-757-9021 FAX: 303-757-9868
Division of Project Support DLM/LTA

CONCRETE PAVEMENT JOINTS

Issued By: Project Development Branch on July 4, 2012

STANDARD PLAN NO.

M-412-1

Sheet No. 1 of 5

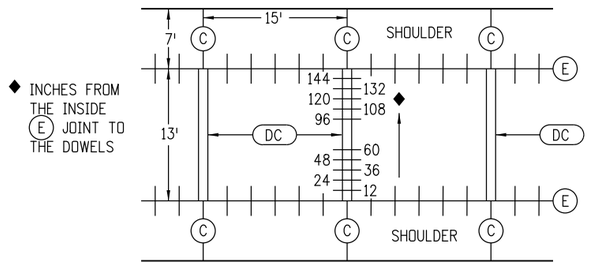

RAMP "A" DOWEL BAR DETAIL
FOR DC JOINT WITH A 13 FT. LANE

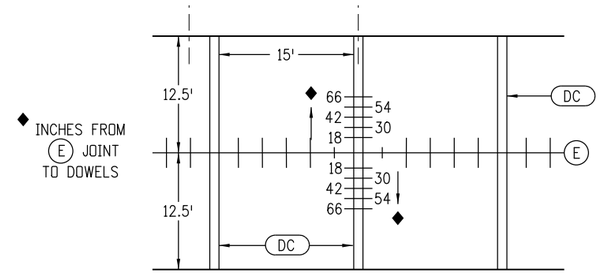

RAMP "B" DOWEL BAR DETAIL FOR DC JOINT
WITH CENTER LONGITUDINAL SPLIT LANE

JOINT LEGEND

(SEE SHEET 5 FOR JOINT DETAILS)

- (C) TRANSVERSE CONTRACTION
- (D) LONGITUDINAL CONSTRUCTION
- (DC) DOWELED TRANSVERSE CONTRACTION
- (L) (E) LONGITUDINAL CONSTRUCTION OR LONGITUDINAL CONTRACTION
- (T) TRANSVERSE CONSTRUCTION

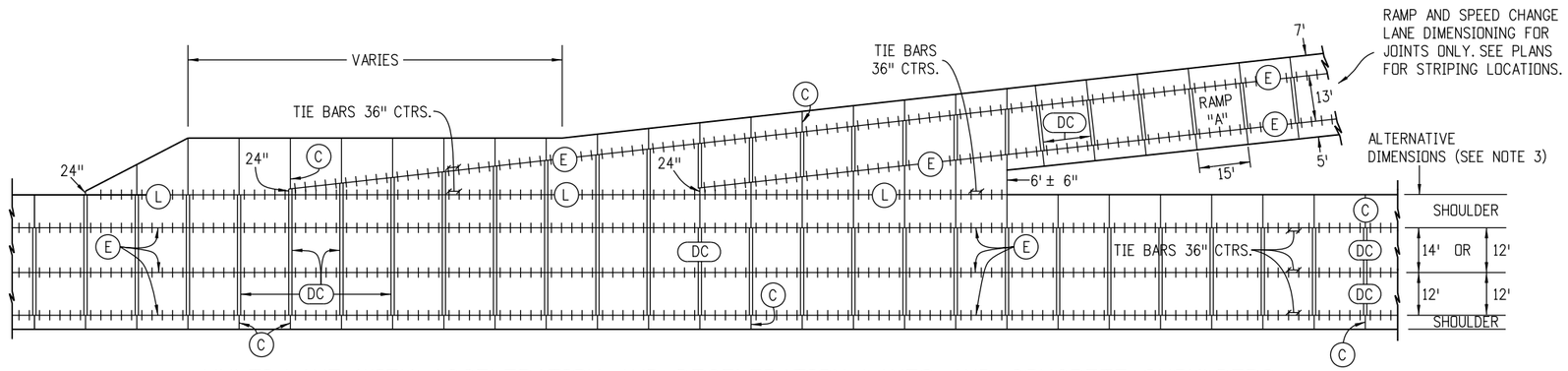

MULTI-LANE WITH ACCELERATION AND DECELERATION LANES AND CONCRETE SHOULDERS

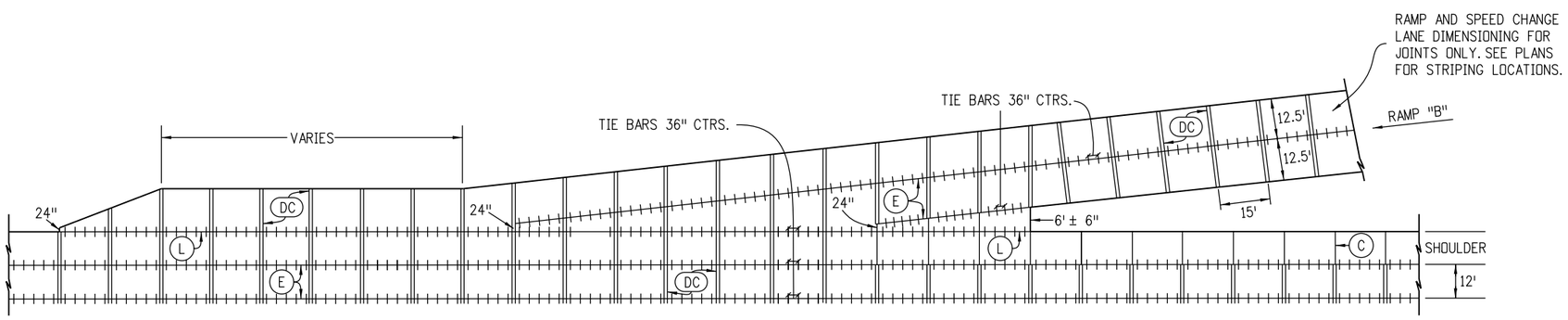

OPTIONAL LONGITUDINAL JOINT IN CENTER FOR SINGLE LANE ACCELERATION AND DECELERATION LANE

Computer File Information			Sheet Revisions	
Creation Date: 07/04/12 Initials: DD			Date:	Comments
Last Modification Date: 07/24/12 Initials: LTA	(R-X)	(R-X)	07/24/12	Changed Tie Bar spacing from 30" to 36".
Full Path: www.coloradodot.info/business/designsupport	(R-X)	(R-X)		
Drawing File Name: 412010205.dgn	(R-X)	(R-X)		
CAD Ver.: MicroStation V8 Scale: Not to Scale Units: English	(R-X)	(R-X)		

Colorado Department of Transportation
4201 East Arkansas Avenue
CDOT HQ, 4th Floor
Denver, CO 80222
Phone: 303-757-9021 FAX: 303-757-9868
Division of Project Support DLM/LTA

CONCRETE PAVEMENT JOINTS

Issued By: Project Development Branch on July 4, 2012

STANDARD PLAN NO.
M-412-1
Sheet No. 2 of 5

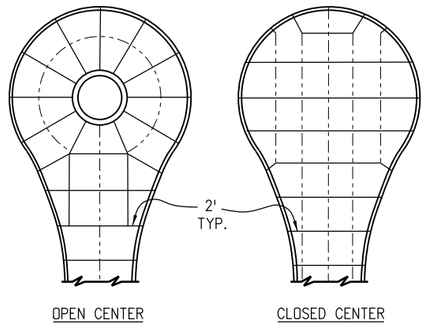

CUL-DE-SAC

JOINT LEGEND

(SEE SHEET 5 FOR JOINT DETAILS)

A	EXPANSION
C	TRANSVERSE CONTRACTION
D	LONGITUDINAL CONSTRUCTION
DC	DOWELED TRANSVERSE CONTRACTION
E	LONGITUDINAL CONTRACTION
L	LONGITUDINAL CONSTRUCTION
T	TRANSVERSE CONSTRUCTION

NOTES

1. LONGITUDINAL JOINTS SHALL BE PLACED ADJACENT TO LANE MARKINGS WHEN POSSIBLE, AND HAVE A MAXIMUM SPACING OF 12 FT.-6 IN. (15 FT. IS PERMITTED WITH MONOLITHIC CURB AND GUTTER).
2. CONSTRUCT TRANSVERSE JOINTS PERPENDICULAR TO THE CENTERLINE OF PAVEMENT AND EXTEND THROUGH THE CURB OR CURB AND GUTTER.
3. * PLACE ½ IN. MIN. EXPANSION JOINT FILLER IN TOP 6 IN. OF CURB JOINT AT INTERSECTION RETURN RADIUS POINTS.
4. THE CONTRACTOR SHALL, UNLESS OTHERWISE SHOWN ON THE PLANS, SELECT AND USE A BOND BREAKER AT INLETS, MANHOLES AND SIMILAR SIZE STRUCTURES. SMALLER STRUCTURES SUCH AS VALVE AND MONUMENT BOXES SHALL NOT REQUIRE A BOND BREAKER.
5. WHERE A LONGITUDINAL JOINT PASSES LESS THAN 1 FT. FROM A CAST-IN-PAVEMENT MANHOLE OR SIMILAR SIZE STRUCTURE, A TYPICAL 2 FT. RADIAL JOINT, AS SHOWN IN THE DETAILS, SHALL BE USED.
6. TRANSVERSE JOINTS SHALL EITHER INTERSECT THE CENTER OF CIRCULAR MANHOLES AND INLETS OR BE AT LEAST 4 FT. AWAY FROM THE EDGE OF CIRCULAR MANHOLES. SEE CURB INLET BOXOUT DETAIL ON SHEET 5.
7. LOCATE (T) JOINT AT A (DC) JOINT OR A MINIMUM OF 6 FT. FROM A (DC) JOINT.
6. THE ENGINEERS SHALL HAVE AN OPTION TO USE INDIVIDUAL DOWELS IN THE DC JOINT ON SHORT RUN (2' ± 6") TO CURB RADIUS RETURNS.

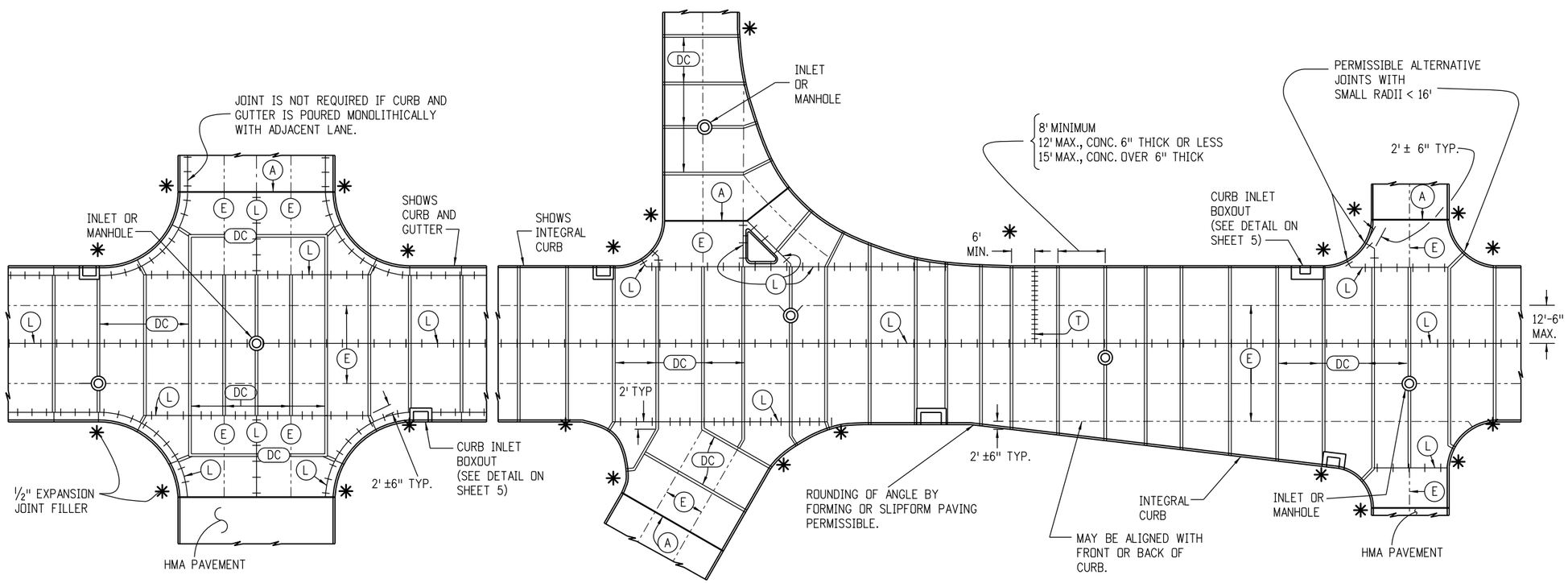

TYPICAL CURBED PAVEMENT JOINT LAYOUT

Computer File Information		
Creation Date: 07/04/12	Initials: DD	
Last Modification Date: 07/04/12	Initials: LTA	R-X
Full Path: www.coloradodot.info/business/designsupport		R-X
Drawing File Name: 412010305.dgn		R-X
CAD Ver.: MicroStation V8 Scale: Not to Scale	Units: English	R-X

Sheet Revisions	
Date:	Comments

Colorado Department of Transportation
4201 East Arkansas Avenue
CDOT HQ, 4th Floor
Denver, CO 80222
Phone: 303-757-9021 FAX: 303-757-9868
Division of Project Support DLM/LTA

CONCRETE PAVEMENT JOINTS

Issued By: Project Development Branch on July 4, 2012

STANDARD PLAN NO.

M-412-1

Sheet No. 3 of 5

JOINT LEGEND

(SEE SHEET 5 FOR JOINT DETAILS)

A	EXPANSION
C	TRANSVERSE CONTRACTION
D	LONGITUDINAL CONSTRUCTION
DC	DOWELED TRANSVERSE CONTRACTION
E	LONGITUDINAL CONTRACTION
L	LONGITUDINAL CONSTRUCTION
T	TRANSVERSE CONSTRUCTION

NOTES

1. LONGITUDINAL JOINTS SHALL BE PLACED ADJACENT TO LANE MARKINGS WHEN POSSIBLE, AND HAVE MAXIMUM SPACING OF 12 FT.-6 IN. (15 FT. IS PERMITTED WITH MONOLITHIC CURB AND GUTTER).
2. CONSTRUCT TRANSVERSE JOINTS PERPENDICULAR TO THE CENTERLINE OF PAVEMENT AND EXTEND THROUGH THE CURB OR CURB AND GUTTER.
3. * PLACE ½ IN. MIN. EXPANSION JOINT FILLER IN TOP 6 IN. OF CURB JOINT AT INTERSECTION RETURN RADIUS POINTS.
4. THE CONTRACTOR SHALL, UNLESS OTHERWISE SHOWN ON THE PLANS, SELECT AND USE A BOND BREAKER AT INLETS, MANHOLES AND SIMILAR SIZE STRUCTURES. SMALLER STRUCTURES SUCH AS VALVE AND MONUMENT BOXES DO NOT REQUIRE A BOND BREAKER.
5. WHERE A LONGITUDINAL JOINT WOULD PASS LESS THAN 1 FT. FROM A CAST-IN-PAVEMENT MANHOLE OR SIMILAR SIZE STRUCTURE, A TYPICAL 2 FT. RADIAL JOINT, AS SHOWN IN THE DETAILS, SHALL BE USED.
6. TRANSVERSE JOINTS SHALL EITHER INTERSECT THE CENTER OF CIRCULAR MANHOLES AND INLETS OR BE AT LEAST 4 FT. AWAY FROM THE EDGE OF CIRCULAR MANHOLES. SEE CURB INLET BOXOUT DETAIL ON SHEET 5.

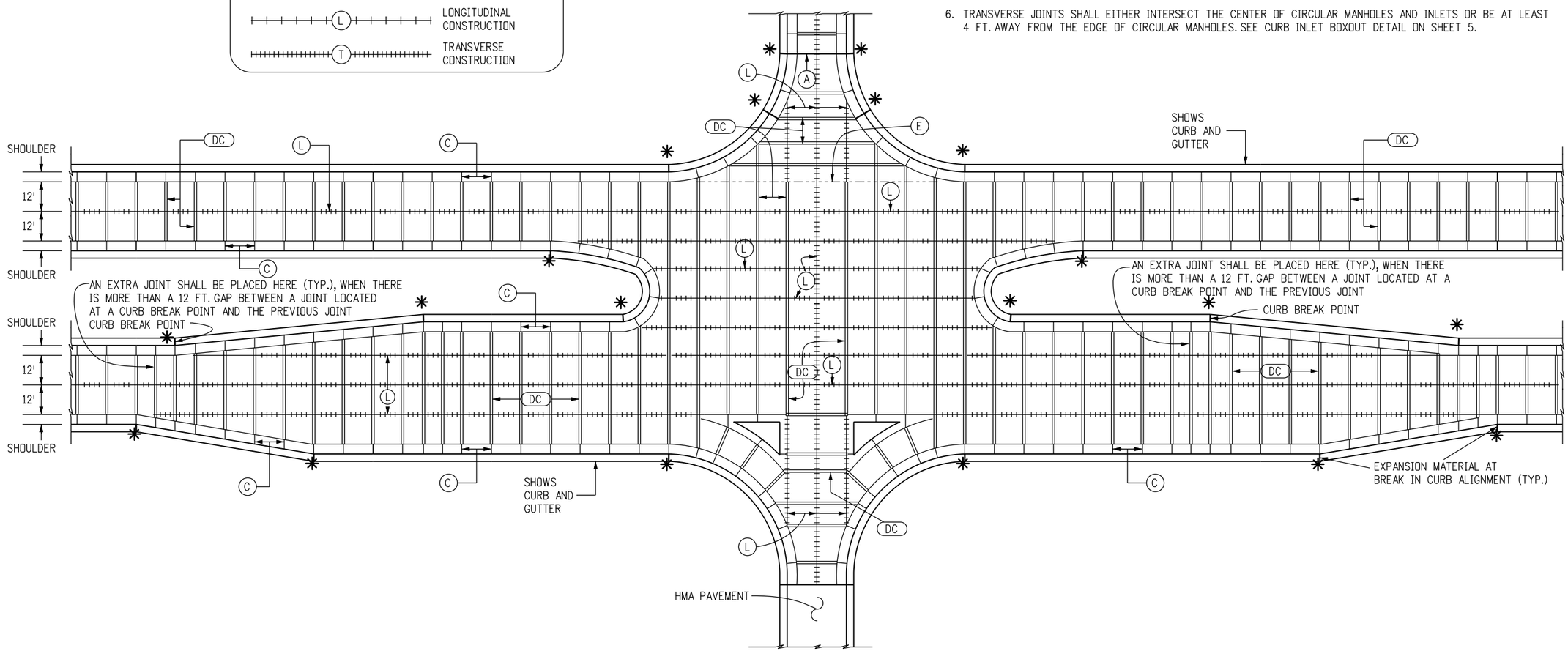

MULTI-LANE INTERSECTION WITH SPEED CHANGE LANE AND CONCRETE SHOULDERS

Computer File Information		
Creation Date: 07/04/12	Initials: DD	
Last Modification Date: 07/04/12	Initials: LTA	(R-X)
Full Path: www.coloradodot.info/business/designsupport		(R-X)
Drawing File Name: 412010405.dgn		(R-X)
CAD Ver.: MicroStation V8 Scale: Not to Scale Units: English		(R-X)

Sheet Revisions	
Date:	Comments

Colorado Department of Transportation
4201 East Arkansas Avenue
CDOT HQ, 4th Floor
Denver, CO 80222
Phone: 303-757-9021 FAX: 303-757-9868
Division of Project Support DLM/LTA

CONCRETE PAVEMENT JOINTS

Issued By: Project Development Branch on July 4, 2012

STANDARD PLAN NO.

M-412-1

Sheet No. 4 of 5

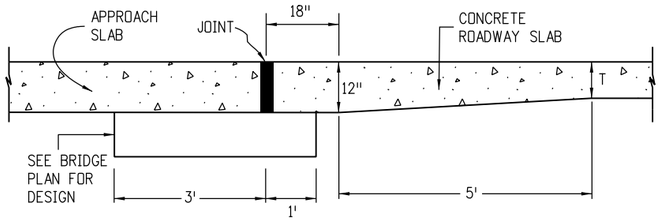

BRIDGE APPROACH

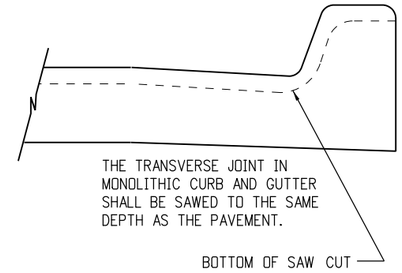

NOTE

PAVEMENT THICKNESS (T), SHALL BE AS SHOWN ON THE PLANS.

PAVEMENT THICKNESS (T)	DOWEL BAR DIAMETER
T < 8 IN.	1 IN.
8 IN. ≥ T ≤ 10 IN.	1.25 IN.
10 IN. > T ≤ 15 IN.	1.50 IN.

REINFORCING SIZE TABLE

TIE BAR SIZE IS NO. 5 WHEN PAVEMENT IS PLACED ON UNBOUND BASES.

TIE BAR IS NO. 6 WHEN PAVEMENT IS PLACED ON LIME TREATED SOIL, ASPHALT OR CEMENT TREATED, MILLED ASPHALT, OR RECYCLED ASPHALT BASES.

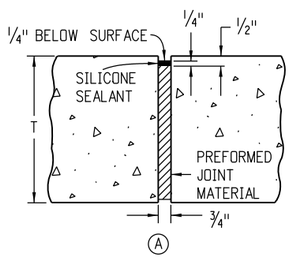

EXPANSION JOINT

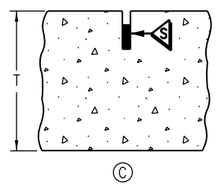

TRANSVERSE CONTRACTION JOINT

(TRANSVERSE WEAKENED PLANE JOINT)

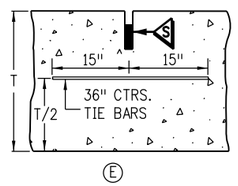

LONGITUDINAL CONTRACTION JOINT

(LONGITUDINAL WEAKENED PLANE JOINT)

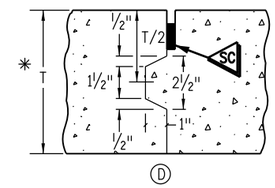

LONGITUDINAL CONSTRUCTION JOINT

* USE ONLY IF T ≥ 8 IN.
FORM ONLY FEMALE KEYWAY

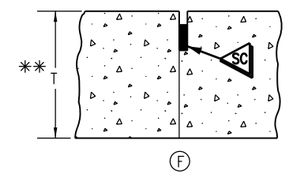

LONGITUDINAL CONSTRUCTION JOINT

** USE ONLY IF T < 8 IN.

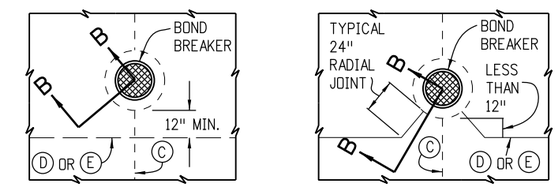

INLET OR MANHOLE CAST IN PAVEMENT

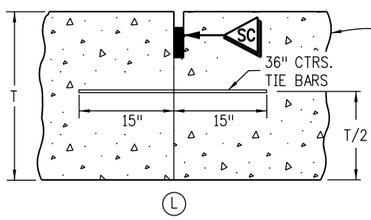

LONGITUDINAL CONSTRUCTION JOINT

A KEYWAY IS ALLOWED TO FACILITATE USE OF BENT TIE BARS OR APPROVED TWO PIECE CONNECTORS

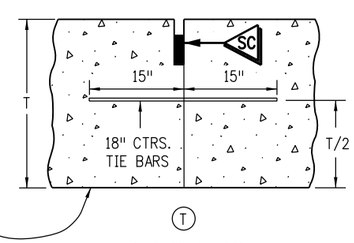

TRANSVERSE CONSTRUCTION JOINT

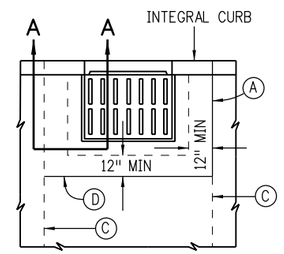

INSTALL TRANSVERSE JOINT AT BOTH BOXOUT CORNERS IF BOXOUT IS 8 FT. OR LONGER.

CURB INLET BOXOUT

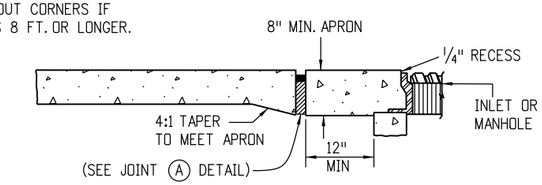

SECTION A-A

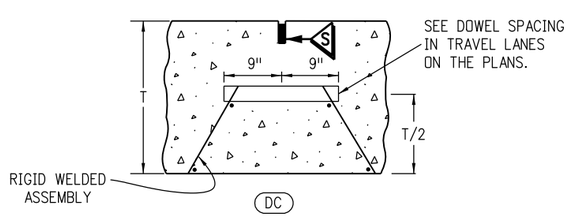

DOWELED TRANSVERSE CONTRACTION JOINT

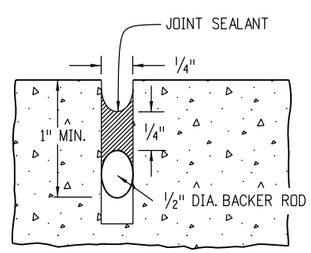

SEAL AT CONSTRUCTION JOINT

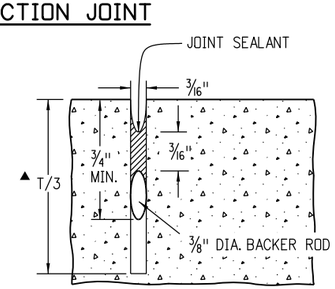

▲ SHALL BE 0.4T FOR LONGITUDINAL JOINTS ALONG SLABS 14 FT. IN WIDTH.

SAWED JOINT

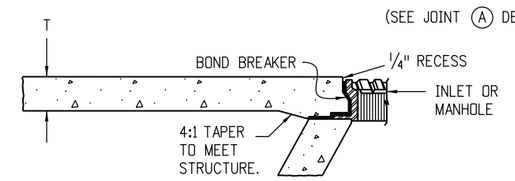

SECTION B-B

BOND BREAKER SHALL BE COMPOSED OF PLASTIC SHEET, BUILDING PAPER OR OTHER APPROVED MATERIAL THAT PREVENTS BONDING.

Computer File Information		
Creation Date: 07/04/12	Initials: DD	
Last Modification Date: 07/24/12	Initials: LTA	(R-X)
Full Path: www.coloradodot.info/business/designsupport		(R-X)
Drawing File Name: 412010505.dgn		(R-X)
CAD Ver.: MicroStation V8 Scale: Not to Scale	Units: English	(R-X)

Sheet Revisions	
Date:	Comments
07/24/12	Changed Tie Bar spacing from 30" to 36".
	Modified the Reinforcing Size Table.

Colorado Department of Transportation
4201 East Arkansas Avenue
CDOT HQ, 4th Floor
Denver, CO 80222
Phone: 303-757-9021 FAX: 303-757-9868
Division of Project Support DLM/LTA

CONCRETE PAVEMENT JOINTS

Issued By: Project Development Branch on July 4, 2012

STANDARD PLAN NO.

M-412-1

Sheet No. 5 of 5

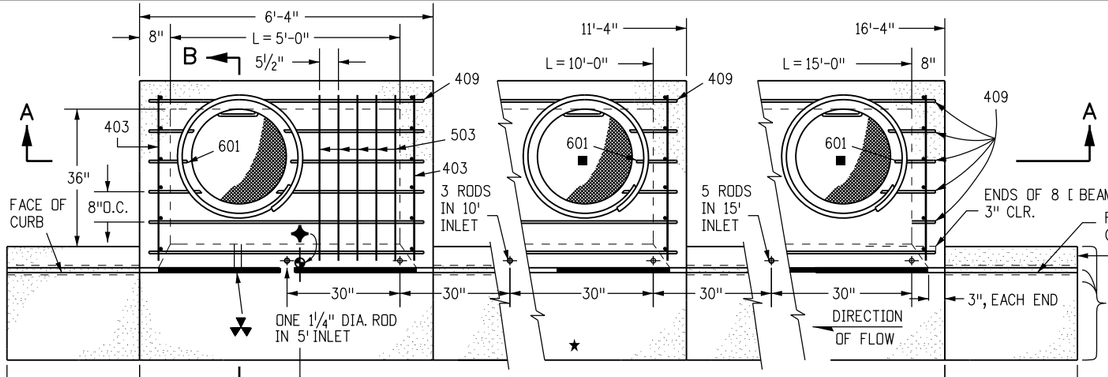

PLAN VIEW

★ FOR LENGTH (L) 10 FT. OR MORE, PROVIDE MAINTENANCE ACCESS AT BOTH ENDS WITH AN ADDITIONAL MANHOLE RING AND COVER. CUT REINFORCEMENT BAR ACCORDINGLY.

✦ STATION POINT AT MIDPOINT OF INLET ALONG FLOWLINE

✳ MEET SHAPE OF NORMAL BARRIER CURB AND GUTTER HERE.

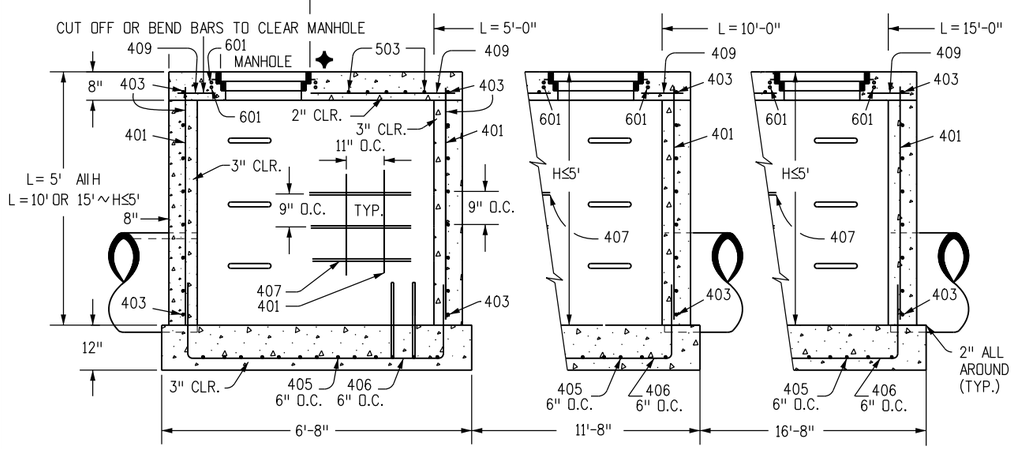

SECTION A-A REGULAR INLET

SEE CHANNEL LAYOUT ON SHEET 2.

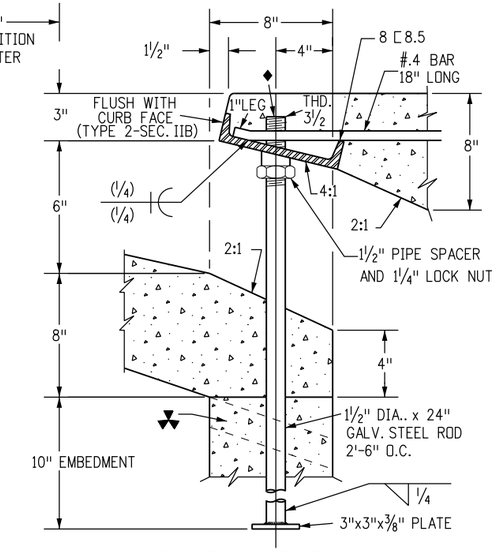

CURB FACE ASSEMBLY

◆ PLACE ENTIRE ASSEMBLY BEFORE POURING CONCRETE.

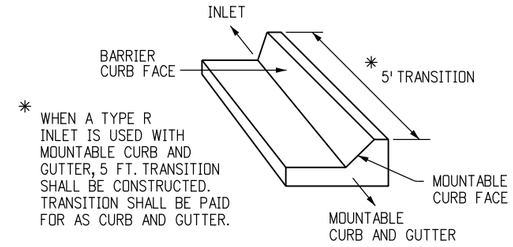

✳ WHEN A TYPE R INLET IS USED WITH MOUNTABLE CURB AND GUTTER, 5 FT. TRANSITION SHALL BE CONSTRUCTED. TRANSITION SHALL BE PAID FOR AS CURB AND GUTTER.

TRANSITION CURB

GENERAL NOTES:

SEE SHEET 2.

▲ - FOR A 1'-0" PAN SLOPE 2" PER FT.

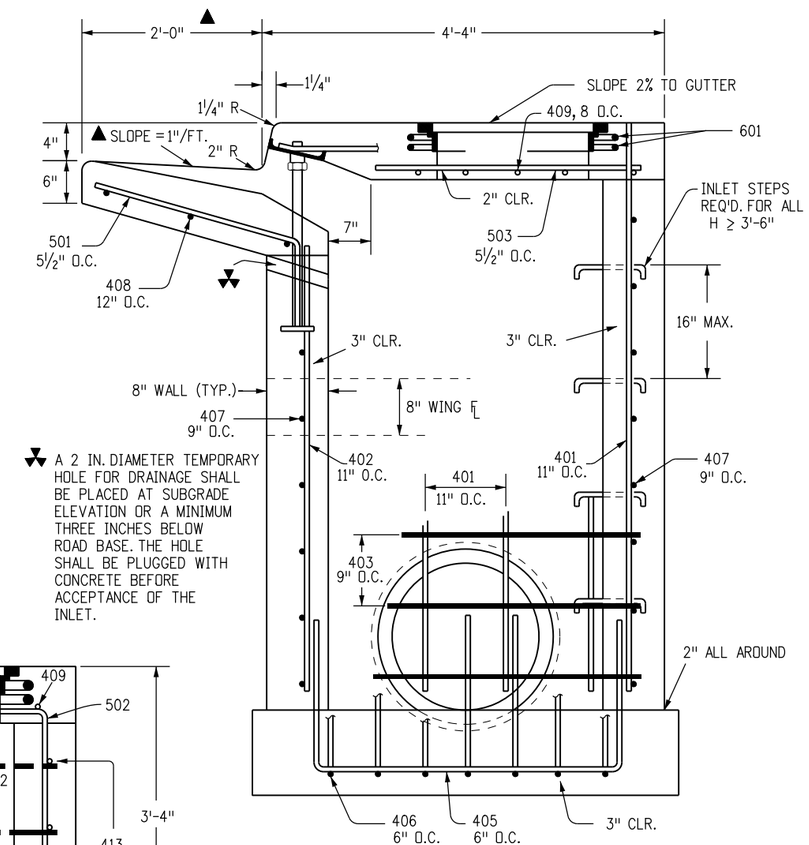

A 2 IN. DIAMETER TEMPORARY HOLE FOR DRAINAGE SHALL BE PLACED AT SUBGRADE ELEVATION OR A MINIMUM THREE INCHES BELOW ROAD BASE. THE HOLE SHALL BE PLUGGED WITH CONCRETE BEFORE ACCEPTANCE OF THE INLET.

SECTION B-B END VIEW

NOTE: MANHOLE RING AND COVER, STATION POINT AND OUTFLOW PIPE SHALL BE LOCATED AT THE SAME END OF THE INLET.

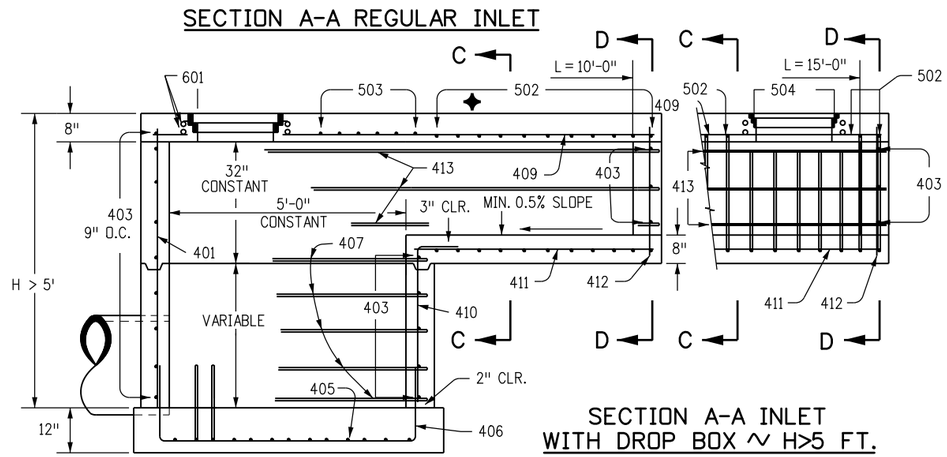

SECTION A-A INLET WITH DROP BOX ~ H>5 FT.

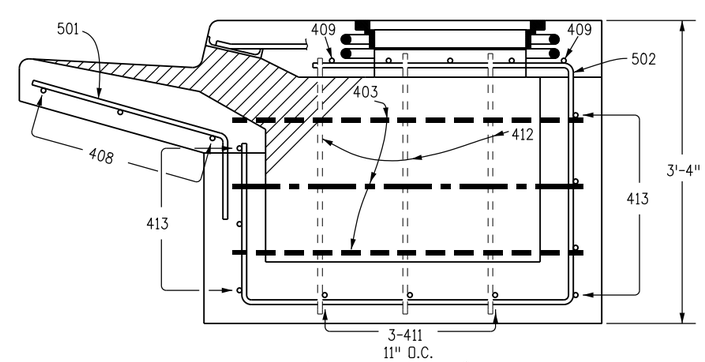

SECTIONS C-C & D-D (DOTTED BARS ARE IN SECTION D-D)

Computer File Information		
Creation Date: 07/04/12	Initials: DD	
Last Modification Date: 07/04/12	Initials: LTA	(R-X)
Full Path: www.coloradodot.info/business/designsupport		(R-X)
Drawing File Name: 6040120102.dgn		(R-X)
CAD Ver.: MicroStation V8 Scale: Not to Scale Units: English		(R-X)

Sheet Revisions	
Date:	Comments

Colorado Department of Transportation
4201 East Arkansas Avenue
Denver, Colorado 80222
Phone: (303) 757-9083
Fax: (303) 757-9820
Project Development Branch DD/LTA

CURB INLET TYPE R

Issued By: Project Development Branch July 4, 2012

STANDARD PLAN NO.

M-604-12

Sheet No. 1 of 2

MARK	BAR # OR SIZE	O.C. SPACING	TYPE	ALL INLETS		INLETS: H ≤ 5 FT.				INLETS: H > 5 FT.			
				L = 5 FT.		L = 10 FT.		L = 15 FT.		L = 10 FT.		L = 15 FT.	
				NO. REQ'D.	LENGTH	NO. REQ'D.	LENGTH	NO. REQ'D.	LENGTH	NO. REQ'D.	LENGTH	NO. REQ'D.	LENGTH
401	4	11"	II	15	*	21	*	26	*	11	*	11	*
402	4	11"	II	7	*	13	*	18	*	7	*	7	*
403	4	9"	II	*	4'-0"	*	4'-0"	*	4'-0"	*	4'-0"	*	4'-0"
405	4	6"	VI	11	6'-10"	21	6'-10"	31	6'-10"	11	6'-10"	11	6'-10"
406	4	6"	VIII	7	8'-10"	7	13'-10"	7	18'-10"	7	8'-10"	7	8'-10"
407	4	9"	II	*	5'-10"	*	10'-10"	*	15'-10"	*	5'-10"	*	5'-10"
408	4	12"	II	3	6'-10"	3	11'-10"	3	16'-0"	3	11'-10"	3	16'-0"
409	4	8"	II	6	5'-10"	6	10'-10"	6	15'-10"	6	10'-10"	6	15'-10"
410	4	11"	VII							3		3	*
411	4	11"	II							3	5'-2"	3	10-2"
412	4	11"	II							3	2'-9"	3	2'-9"
413	4	9"	II							7	10'-10"	7	15'-10"
501	5	5½"	IV	11	3'-4"	22	3'-4"	33	3'-4"	22	3'-4"	33	3'-4"
502	5	5½"	III							11	11'-5"	17	11'-5"
503	5	5½"	II	5	3'-6"	16	3'-6"	27	3'-6"	6	3'-6"	6	3'-6"
504	5	5½"	IX									5	8'-4"
601	6	2½"	V	2	8'-10"	2	8'-10"	2	8'-10"	2	8'-10"	4	8'-10"
■8[8.5				1	5'-10"	1	10'-10"	1	15'-10"	1	10'-10"	1	15'-10"
				2 BARS, 1 RODS	——	4 BARS, 3 RODS	——	8 BARS, 5 RODS	——	4 BARS, 3 RODS	——	8 BARS, 5 RODS	——
						REGULAR INLETS				DROP BOX INLETS			

* VARIABLE REFER TO TABLE TWO.

■ INCLUDE #4, 18 IN. BARS (SEE CHANNEL LAYOUT).

TABLE ONE ~ BAR LIST FOR CURB INLETS, TYPE "R"

"H"	LENGTH			NO. REQ'D. REGULAR		NO. REQ'D. DROP BOX		L = 5 FT.		L = 10 FT.		L = 15 FT.	
	401	402	410	403	407	403	407	CONC. CU. YDS.	STEEL LBS.	CONC. CU. YDS.	STEEL LBS.	CONC. CU. YDS.	STEEL LBS.
3'-0"	2'-8"	1'-8"		10	7			3.2	285	5.3	497	7.4	706
3'-6"	3'-2"	2'-2"		10	7			3.4	305	5.7	528	7.9	747
4'-0"	3'-8"	2'-8"		12	9			3.7	326	6.0	559	8.4	786
4'-6"	4'-2"	3'-2"		12	9			3.9	334	6.4	571	8.8	803
5'-0"	4'-8"	3'-8"		14	11			4.1	354	6.7	602	9.3	844
5'-6"	5'-2"	4'-2"	3'-5"	16	13	15	6	4.4	375	6.0	607	7.4	850
6'-0"	5'-8"	4'-8"	3'-11"	16	13	16	6	4.6	382	6.2	616	7.6	860
6'-6"	6'-2"	5'-2"	4'-5"	18	15	18	8	4.8	402	6.4	637	7.8	880
7'-0"	6'-8"	5'-8"	4'-11"	20	17	19	10	5.0	423	6.6	654	8.0	897
7'-6"	7'-2"	6-2"	5'-5"	20	17	20	10	5.3	430	6.9	664	8.3	907
8'-0"	7'-8"	6'-8"	5'-11"	22	19	22	12	5.5	451	7.1	684	8.5	927
8'-6"	8'-2"	7'-2"	6'-5"	24	21	23	14	5.7	471	7.3	702	8.7	944
9'-0"	8'-8"	7'-8"	6'-11"	24	21	24	14	6.0	479	7.6	711	9.0	954
9'-6"	9'-2"	8'-2"	7'-5"	26	23	26	16	6.2	499	7.8	732	9.2	974
10'-0"	9'-8"	8'-8"	7'-11"	28	25	27	18	6.4	520	8.0	749	9.4	992
10'-6"	10'-2"	9'-2"	8'-5"	28	25	28	18	6.7	527	8.3	759	9.7	1001
11'-0"	10'-8"	9'-8"	8'-11"	30	27	30	20	6.9	547	8.5	779	9.9	1022

NOTES: FOR L = 5 FT., L = 10 FT., AND L = 15 FT.
REGULAR INLETS: TOTAL QUANTITIES NEEDED ARE OUTSIDE THE HEAVY BLACK LINE.
DROP BOX INLETS: TOTAL QUANTITIES NEEDED ARE INSIDE THE HEAVY BLACK LINE.
STEEL WEIGHTS DO NOT INCLUDE STRUCTURAL STEEL CHANNEL.

TABLE TWO ~ BARS AND QUANTITIES VARIABLE WITH "H"

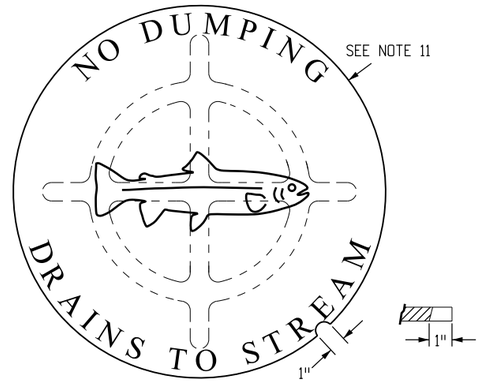

PLAN VIEW

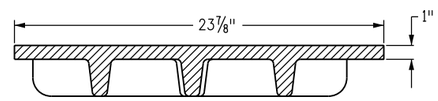

ELEVATION VIEW
MANHOLE COVER (TYP.)

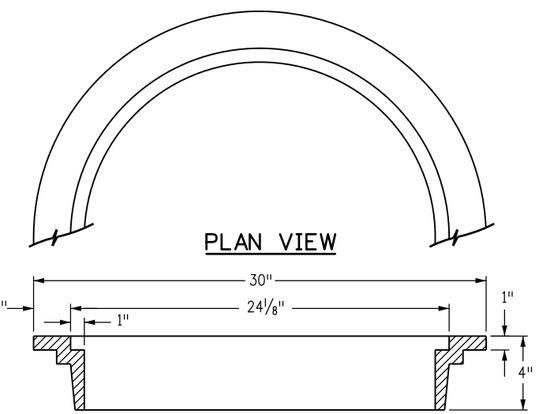

PLAN VIEW

ELEVATION VIEW
MANHOLE RING (TYP.)

WEIGHTS: COVER = 125 LBS.
+ RING = 135 LBS.
TOTAL = 260 LBS.

GENERAL NOTES

1. CONCRETE SHALL BE CLASS B. INLET MAY BE CAST-IN-PLACE OR PRECAST.
2. CONCRETE WALLS SHALL BE FORMED ON BOTH SIDES AND SHALL BE 8 IN. THICK.
3. INLET STEPS SHALL BE IN CONFORMANCE WITH AASHTO M 199.
4. CURB FACE ASSEMBLY SHALL BE GALVANIZED AFTER WELDING.
5. EXPOSED CONCRETE CORNERS SHALL BE CHAMFERED ¾ IN. CURB AND GUTTER CORNERS SHALL BE FINISHED TO MATCH THE EXISTING CURB AND GUTTER BEYOND THE TRANSITION GUTTER.
6. REINFORCING BARS SHALL BE DEFORMED AND SHALL HAVE A 2 IN. MINIMUM CLEARANCE. ALL REINFORCING BARS SHALL BE EPOXY COATED.
7. DIMENSIONS AND WEIGHTS OF TYPICAL MANHOLE RING AND COVER ARE NOMINAL.
8. MATERIAL FOR MANHOLE RINGS AND COVERS SHALL BE GRAY OR DUCTILE CAST IRON IN ACCORDANCE WITH SUBSECTION 712.06.
9. SINCE PIPE ENTRIES INTO THE INLET ARE VARIABLE, THE DIMENSIONS SHOWN ARE TYPICAL. ACTUAL DIMENSIONS AND QUANTITIES FOR CONCRETE AND REINFORCEMENT SHALL BE AS REQUIRED IN THE WORK. QUANTITIES INCLUDE VOLUMES OCCUPIED BY PIPES.
10. STRUCTURAL STEEL SHALL BE GALVANIZED AND SHALL BE IN ACCORDANCE WITH SUBSECTION 712.06.
11. ALL MANHOLE COVERS SHALL BE CAST WITH A "NO DUMPING DRAINS TO STREAM" MESSAGE AND A FISH SYMBOL. THE SURFACE OF THE MANHOLE COVER SHALL HAVE A NON-SLIP PATTERN.

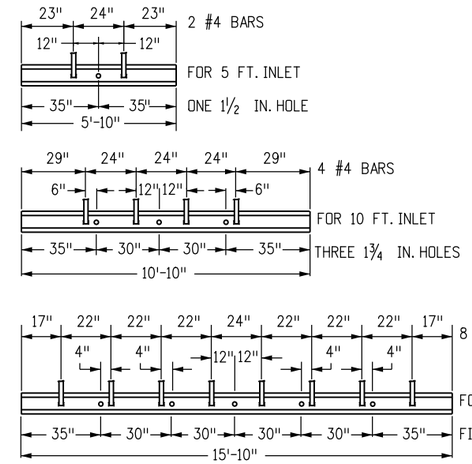

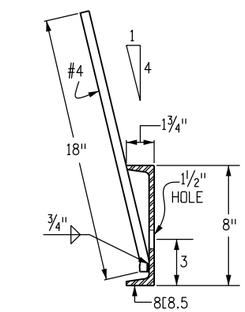

SECTION AT HOLE (TYP.)

CHANNEL LAYOUT DETAILS
SEE CURB FACE ASSEMBLY ON SHEET 1.

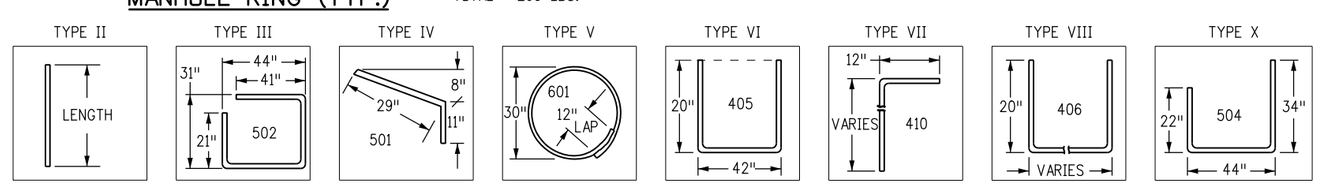

BAR BENDING DIAGRAMS ~ (DIMENSIONS ARE OUT-TO-OUT OF BAR)

Computer File Information	
Creation Date: 07/04/12	Initials: DD
Last Modification Date: 07/04/12	Initials: LTA (R-X)
Full Path: www.coloradodot.info/business/designsupport	(R-X)
Drawing File Name: 6040120202.dgn	(R-X)
CAD Ver.: MicroStation V8 Scale: Not to Scale Units: English	(R-X)

Sheet Revisions	
Date:	Comments

Colorado Department of Transportation
4201 East Arkansas Avenue
Denver, Colorado 80222
Phone: (303) 757-9083
Fax: (303) 757-9820
Project Development Branch DD/LTA

CURB INLET TYPE R

Issued By: Project Development Branch July 4, 2012

STANDARD PLAN NO.
M-604-12
Sheet No. 2 of 2

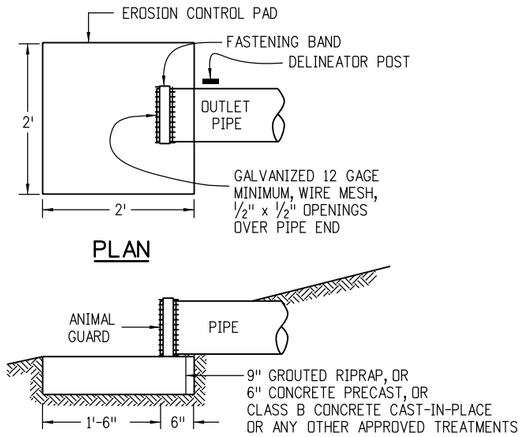

OUTLET PIPE END TREATMENT

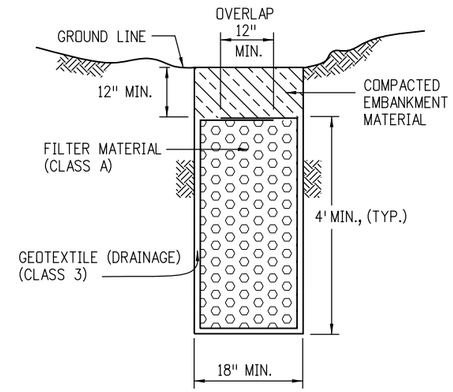

FRENCH DRAIN

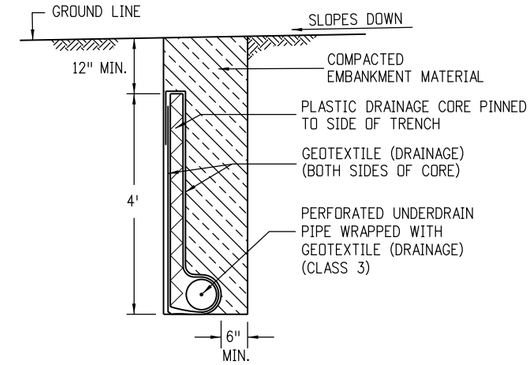

GEOCOMPOSITE UNDERDRAIN

GENERAL NOTES

1. THE LOCATION AND GRADE OF SUBSURFACE DRAINS AND OUTLET PIPES WILL BE AS SHOWN ON THE PLANS OR AS DIRECTED BY THE ENGINEER.
2. OUTLETS FOR THE EDGE DRAINS ARE TO BE SPACED AT MAXIMUM 600 FT. INTERVALS OR AS SHOWN ON THE PLANS. GEOCOMPOSITE OUTLET CONNECTIONS SHALL CONFORM TO MANUFACTURER'S RECOMMENDATIONS.
3. WHERE THE UNDERDRAIN PIPE OUTLETS ONTO A SLOPE OR DITCH, THE OUTLET PIPE END SHALL BE MARKED WITH A DELINEATOR POST, AND HAVE AN ANIMAL GUARD AND AN EROSION CONTROL PAD.
4. THE GEOCOMPOSITE SHALL BE SECURED TO THE WALL OR TO THE TRENCH SIDE TO PREVENT MOVEMENT DURING BACKFILLING.
5. DRAIN HOLES IN RETAINING WALL SHALL BE SPACED AT 10 FT. INTERVALS OR AS SHOWN ON THE PLANS.
6. STRUCTURE EXCAVATION AND BACKFILL LIMITS FOR RETAINING WALLS ARE SHOWN ON STANDARD PLAN M-206-1. ALL EXTRA EXCAVATION AND BACKFILL WORK NECESSARY TO COMPLETE RETAINING WALL, AGGREGATE, AND GEOCOMPOSITE DRAINS IS INCLUDED IN THE DRAIN WORK.
7. FILTER MATERIAL SHALL BE TAMPED WITH A LIGHT VIBRATORY TAMPER PRIOR TO OVERLAPPING THE GEOTEXTILE FABRIC.
8. THE EDGE DRAIN TRENCH SHALL BE CONSTRUCTED AFTER PLACEMENT OF THE AGGREGATE BASE AND SUBBASE.

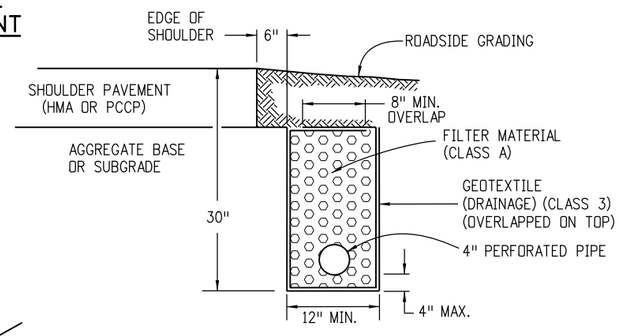

PIPE EDGE DRAIN

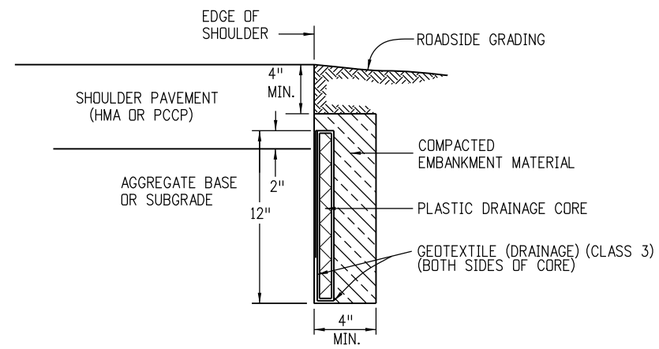

GEOCOMPOSITE EDGE DRAIN

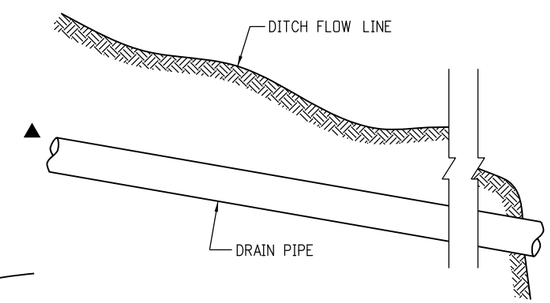

UNDERDRAIN PIPE

FLOWLINE OF PIPE SHALL FOLLOW ESTABLISHED GRADE AND NOT NATURAL SLOPE OF GROUND LINE.

▲ THE SLOPE OF PERFORATED UNDERDRAIN PIPES AND NON-PERFORATED UNDERDRAIN PIPES SHALL BE UNIFORM.

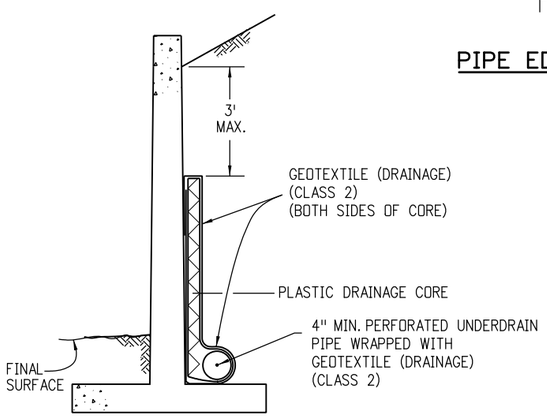

GEOCOMPOSITE DRAIN WITH PIPE

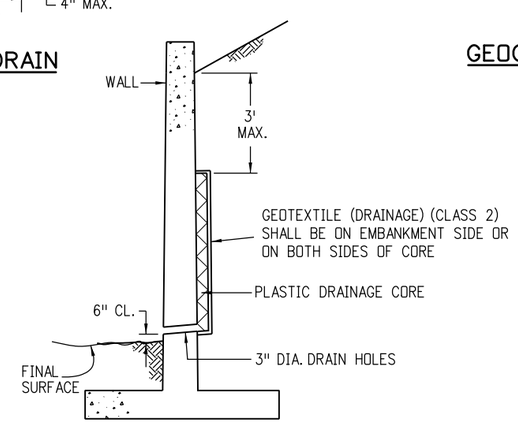

GEOCOMPOSITE DRAIN WITHOUT PIPE

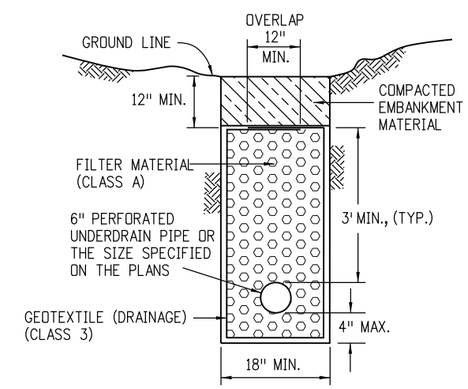

PIPE UNDERDRAIN

Computer File Information			Sheet Revisions	
Creation Date: 07/04/12	Initials: DD		Date:	Comments
Last Modification Date: 07/04/12	Initials: LTA	(R-X)		
Full Path: www.coloradodot.info/business/designsupport		(R-X)		
Drawing File Name: 605010101.dgn		(R-X)		
CAD Ver.: MicroStation V8 Scale: Not to Scale Units: English		(R-X)		

Colorado Department of Transportation
4201 East Arkansas Avenue
Denver, Colorado 80222
Phone: (303) 757-9083
Fax: (303) 757-9820
Project Development Branch DD/LTA

SUBSURFACE DRAINS

Issued By: Project Development Branch July 4, 2012

STANDARD PLAN NO.

M-605-1

Sheet No. 1 of 1

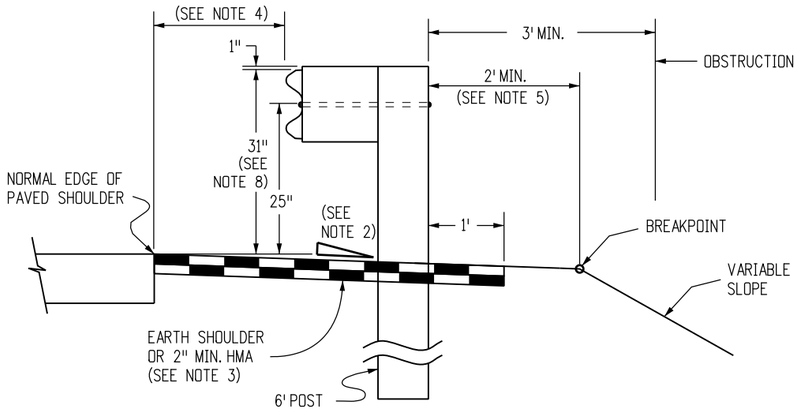

NORMAL ROADSIDE INSTALLATION WHEN FILL REQUIRES GUARDRAIL

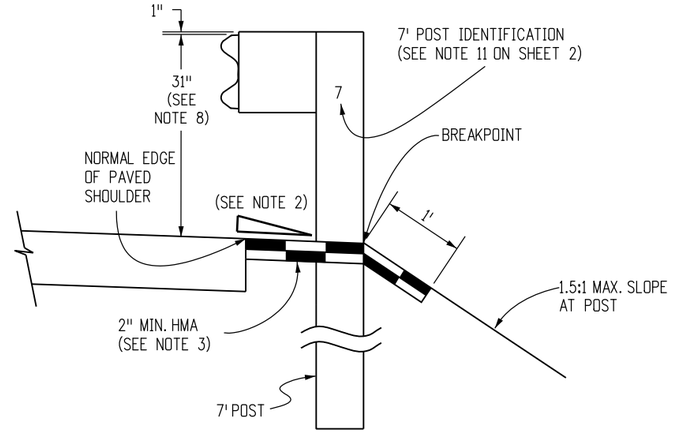

RESTRICTIVE ROADSIDE INSTALLATION WITH 7 FOOT GUARDRAIL POSTS

(SEE NOTE 5)

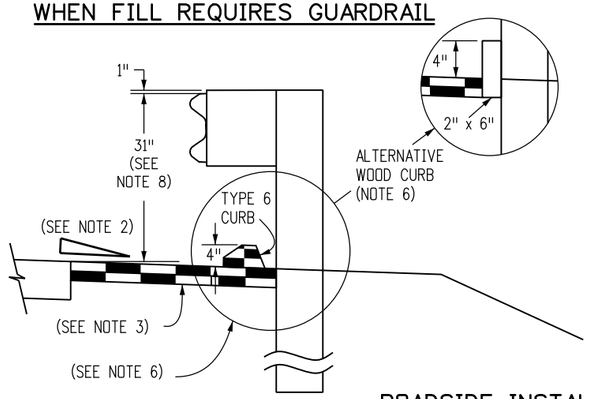

OPTION A

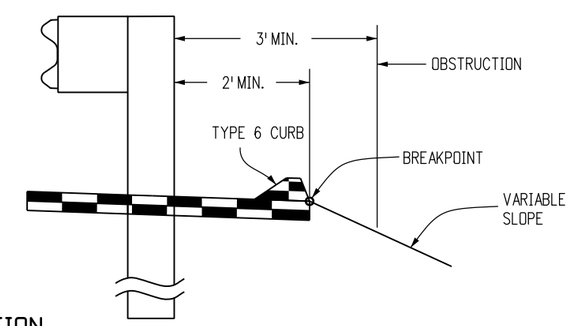

OPTION B

ROADSIDE INSTALLATION WITH EROSION CONTROL CURB

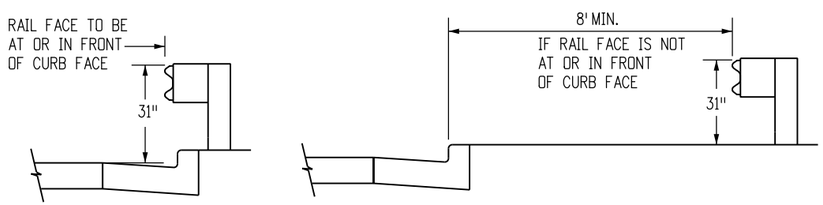

URBAN ROADSIDE INSTALLATION WITH CURB AND GUTTER

LOCATION	SPACING
ALL LOCATIONS EXCEPT BRIDGE RAIL LOCATIONS	6'-3"
BRIDGE OR STRUCTURE APPROACH	SEE SHEETS 12 & 20

NORMAL CENTER-TO-CENTER POST SPACING

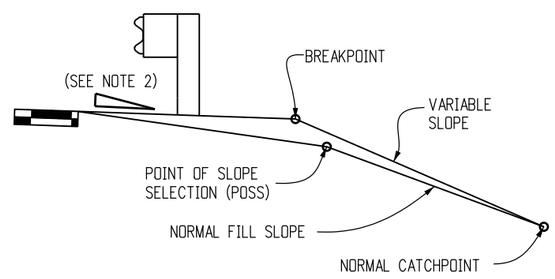

EMBANKMENT WITH GUARDRAIL

(NOTE: THE CATCHPOINT REMAINS THE SAME AS THAT FOR "NORMAL" FILL SLOPE. FOR THE WIDER "Z" DISTANCES, THE VARIABLE SLOPE MAY "CATCH" AT THE POSS.)

GENERAL NOTES

1. TOLERANCE FOR TOP OF GUARDRAIL BEAM IS ±1 IN.
2. RATE OF SLOPE DEPENDS ON GUARDRAIL LOCATION:
   A. FOR GUARDRAIL FACE 2 FT. OR LESS FROM THE NORMAL EDGE OF PAVED SHOULDER, CONTINUE THE RATE OF SLOPE OF THE NORMAL PAVED SHOULDER TO THE BREAKPOINT.
   B. FOR GUARDRAIL FACE MORE THAN 2 FT. FROM THE NORMAL EDGE OF THE PAVED SHOULDER, THE SLOPE SHALL BE 10:1 OR FLATTER.
3. WHEN SPECIFIED ON THE PLANS, EXTEND A 2 IN. MINIMUM THICKNESS PAVED SURFACE TO 1 FT. BEHIND THE GUARDRAIL POSTS OR TO THE EROSION CONTROL CURB AS SHOWN ON PLANS. ASPHALT CUTTING & PATCHING OR OTHER APPROVED METHOD SHALL BE USED TO MINIMIZE DAMAGE TO ALL PAVED SURFACES UNDER GUARDRAIL INSTALLATIONS. ALL REPAIRS TO THE PAVED AREA WILL NOT BE MEASURED AND PAID FOR SEPARATELY BUT SHALL BE INCLUDED IN THE COST OF THE WORK. A MINIMUM 3 IN. THICK FIBER REINFORCED CONCRETE PAVEMENT MAY ALSO BE USED FOR PAVING BENEATH THE GUARDRAIL. INSTALL THE POST IN A ½ IN. OVERSIZED FORMED HOLE FOR GUARDRAIL RUNS AND TERMINALS AS DIRECTED. PAYMENT FOR THIS PAVED SURFACE WILL BE MADE UNDER A PAVEMENT OR CONCRETE PAY ITEM WITH QUANTITIES SHOWN ON THE PLANS.
4. THE MINIMUM GUARDRAIL OFFSET FROM PAVED SHOULDER EDGE SHALL BE:
   0 FT. FOR SHOULDERS 8 FT. OR WIDER
   2 FT. FOR SHOULDERS 6 FT. OR LESS

   THE GUARDRAIL OFFSET FROM PAVED INSIDE SHOULDER EDGE OF A DIVIDED HIGHWAY SHALL BE;
   0 FT. MINIMUM FOR SHOULDERS 6 FT. OR WIDER
   2 FT. DESIRABLE FOR 4 FT. SHOULDERS

   THE ABOVE 2 FT. GUARDRAIL TO SHOULDER OFFSET IS DESIRABLE BUT NOT REQUIRED FOR:
   A. FOR AN EXISTING HIGHWAY WITH A DESIGN SPEED LESS THAN 50 MPH, THE MINIMUM OFFSET IS 4 FT. FROM THE TRAVELED WAY.
   B. FOR A ONE-WAY ONE-LANE RAMP, AND WHERE ONE OR MORE OF THE FOLLOWING ARE TRUE:
      (1) THE NON-OFFSET GUARDRAIL BEGINS AT LEAST 100 FT. BEYOND RAMP NOSE.
      (2) THE NON-OFFSET GUARDRAIL IS NOT LOCATED ON THE RAMP EXIT OR ENTRANCE CURVE CONNECTION TO THE MAJOR HIGHWAY.
      (3) THE RAMP SHOULDERS ARE 4 FT. OR WIDER.

   USE OF GREATER THAN MINIMUM OFFSET DIMENSIONS IS ENCOURAGED TO MEET THE DESIRABLE GOAL OF PLACING THE GUARDRAIL AS FAR AS POSSIBLE FROM THE TRAVEL WAY, EVEN FOR SHORT DISTANCES, WHILE PROVIDING A SMOOTH CHANGE IN GUARDRAIL ALIGNMENT.
5. IF 2 FT. CANNOT BE PROVIDED BETWEEN THE BACK OF THE GUARDRAIL POST AND THE BREAKPOINT, USE 7 FT. GUARDRAIL POSTS. REFER TO THE "RESTRICTIVE ROADSIDE INSTALLATION" DETAIL.
6. WHEN SPECIFIED ON THE PLANS, INSTALL 4 IN. HIGH TYPE 6 CURB WITH ITS FACE AT OR BEHIND THE RAIL FACE. AS AN ALTERNATIVE WHEN SPECIFIED ON THE PLANS, INSTALL A 2 IN. x 6 IN. TREATED (AASHTO M 133) WOOD CURB. FASTEN WITH A 4 IN. LAG BOLT AND WASHER AT EACH WOOD POST, OR WITH A ¼ IN. DIA. BOLT WITH WASHER AND NUT AT EACH STEEL POST. IF THE 2 IN. x 6 IN. WOOD CURB IS SPECIFIED, IT WILL BE INCLUDED IN THE COST OF THE GUARDRAIL. IF APPROVED BY THE ENGINEER, A 2 IN. x 4 IN. TREATED WOOD CURB MAY BE SUBSTITUTED FOR THE 2 IN. x 6 IN. CURB AND SET ON TOP OF PAVEMENT SURFACE AND ATTACHED AS DESCRIBED ABOVE. NO SPLICING SHALL BE ALLOWED IN WOOD CURBS. ADJACENT BOARDS SHALL BE BUTTED TOGETHER AND BOLTED AT A POST LOCATION. JOINTS SHALL BE LOCATED AT THE POSTS.
7. SEE SHEETS 7 AND 9 FOR CURB TREATMENTS AT GUARDRAIL TERMINALS.
8. IF THIS DIMENSION WILL BE LESS THAN 28 INCHES, RESET GUARDRAIL HEIGHT TO 28 INCHES OR ABOVE.
9. ALL W-BEAM SPLICES, AND SPLICES OF TERMINAL CONNECTORS TO W-BEAM SHALL BE LAPPED IN THE DIRECTION OF TRAFFIC UNLESS OTHERWISE NOTED.
10. MATERIAL TYPE AND SHAPE OF POSTS AND BLOCKS SHALL BE THE SAME THROUGHOUT THE PROJECT EXCEPT WHEN SPECIFIC POSTS AND BLOCKS ARE SPECIFIED, i.e. AT END ANCHORAGES AND BOX CULVERTS.

THE GENERAL NOTES CONTINUE ON SHEET 2.

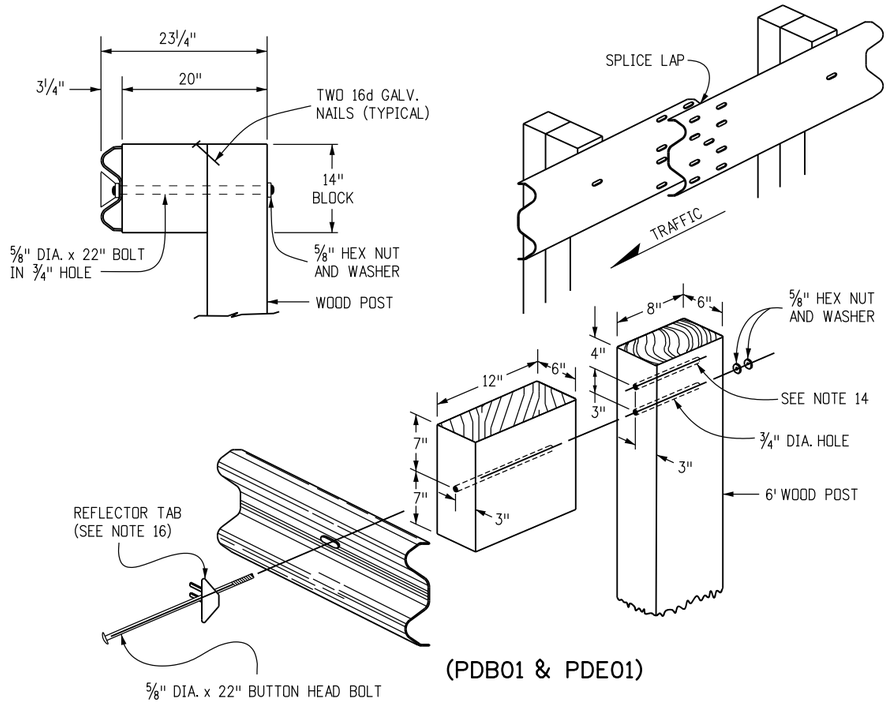

(PDB01 & PDE01)

WOOD POST & BLOCK

(NOMINAL DIMENSIONS ARE SHOWN FOR THE POSTS & BLOCKS)

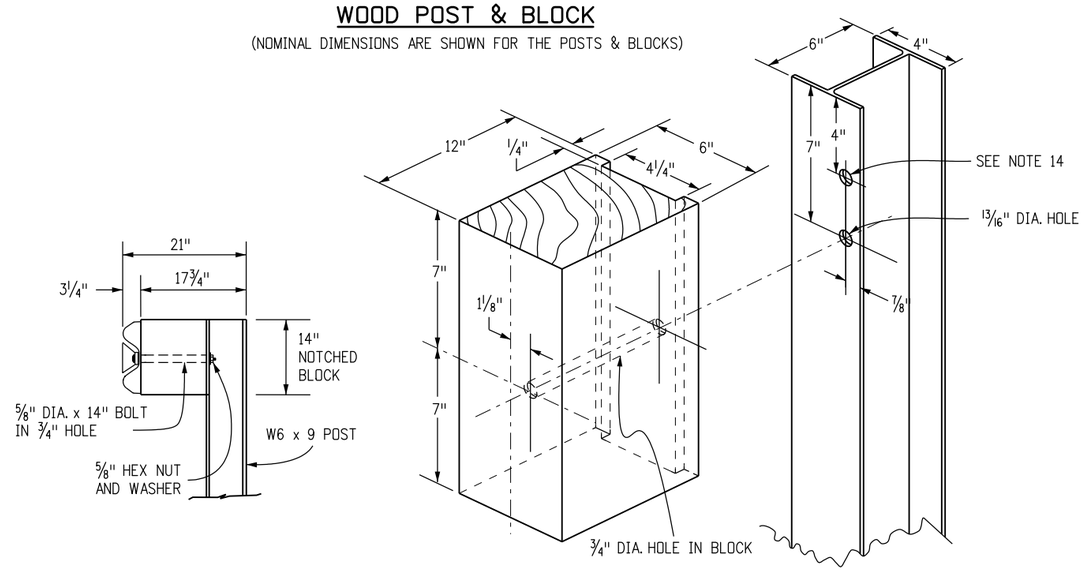

STEEL POST & NOTCHED BLOCK

(NOMINAL DIMENSIONS ARE SHOWN FOR THE POSTS & BLOCKS)

(PWE01)

GENERAL NOTES (CONTINUED FROM SHEET 1)

11. WHEN SPECIFIED IN THE CONTRACT, 7 FT. POSTS SHALL BE INSTALLED INSTEAD OF THE STANDARD 6 FT. POSTS. THE 7 FT. POSTS SHALL BE MARKED WITH THE NUMBER 7 TO ENSURE PERMANENT INDENTIFICATION. STEEL POSTS SHALL BE STAMPED PRIOR TO GALVANIZING. THE NUMBER 7 SHALL BE A MINIMUM 2 IN. TALL AND LOCATED AS SHOWN ON THE ELEVATION VIEW ON SHEET 1.

12. THE STANDARD 3 IN. X 1¾ IN. X 3/16 IN. RECTANGULAR WASHER USED UNDER POST BOLT HEADS IN THE PAST MAY REMAIN IN EXISTING INSTALLATIONS BUT SHALL NOT BE USED IN NEW CONSTRUCTION, REPAIRS, OR RESETTING OF RAIL, EXCEPT WHEN SPECIFICALLY IDENTIFIED ON THE STANDARD PLAN.

13. STANDARD GALVANIZED ROUND STEEL WASHERS SHALL BE USED UNDER ALL NUTS IN CONTACT WITH WOOD POSTS.

14. AN ADDITIONAL HOLE SHALL BE PROVIDED IN THE POSTS TO FACILITATE FUTURE RAISING OF THE RAIL ELEMENTS AND BLOCKS FOR OVERLAYS.

15. RETROREFLECTOR TABS SHALL BE INSTALLED AT 25 FT. INTERVALS (SEE SHEETS 6 AND 8 FOR EXCEPTIONS). RETROREFLECTOR TABS WILL NOT BE PAID FOR SEPARATELY BUT SHALL BE INCLUDED IN THE WORK. THE TABS SHALL BE MOUNTED SO THE BOLT SLOT FACES AWAY FROM TRAFFIC, AND THE RETROREFLECTOR SURFACE FACES THE APPROACHING TRAFFIC FOR ONE-WAY ROADS. FOR TWO-WAY ROADS, BOTH SIDES OF THE TABS SHALL BE RETROREFLECTIVE, SO THAT DELINEATION IS PROVIDED FOR BOTH DIRECTIONS OF TRAVEL. THE RETROREFLECTIVE SHEETING COLOR SHALL MATCH THE COLOR OF THE ADJACENT TRAVEL WAY EDGE LINE. SEE THE RETROREFLECTOR TAB DETAIL ON SHEET 3.

16. AT THE TIME OF INSTALLATION, WOOD POSTS OR BLOCKS WITH SEASONING CHECKS GREATER THAN ¼ IN. SHALL NOT BE USED WHEN THE CHECK EXTENDS THE FULL LENGTH OF THE PIECE.

17. WOOD BLOCKS SHALL BE CUT FROM THE SAME CROSS-SECTION, SPECIES, AND GRADE, AND SHALL RECEIVE THE SAME PRESERVATIVE TREATMENT AS THE POSTS WHEN WOOD POSTS ARE USED.

18. REFERENCES SUCH AS ΘΘPDB01", ΘΘPDE01", AND ΘΘPWE01" IN THIS STANDARD PLAN SPECIFY HARDWARE DETAILS FROM ΘΘA GUIDE TO STANDARDIZED HIGHWAY BARRIER HARDWARE" PREPARED BY THE AASHTO-AGC-ARTBA JOINT COOPERATIVE COMMITTEE.

19. NOTCHED RAIL BLOCKS MANUFACTURED FROM SYNTHETIC MATERIAL WILL BE ACCEPTED AS ALTERNATIVES TO WOOD NOTCHED BLOCKS FOR USE WITH STEEL POSTS PROVIDED THAT THE BLOCKS HAVE RECEIVED FHWA APPROVAL AND ARE CERTIFIED AS IDENTICAL TO THE SPECIMENS USED FOR TESTING AND APPROVAL.

20. WOOD POSTS SHALL BE MADE OF TIMBER WITH AN EXTREME FIBER STRESS IN BENDING OF 1200 PSI STRESS GRADING AND POST DIMENSIONS SHALL CONFORM WITH THE RULES OF THE WEST COAST INSPECTION BUREAU, OR THE SOUTHERN PINE BUREAU, OR THE WESTERN WOOD PRODUCTS ASSOCIATION. TIMBER FOR POSTS SHALL BE EITHER ROUGH SAWN (UNPLANED) OR S4S (SURFACED FOUR SIDES) WITH NOMINAL DIMENSIONS INDICATED. ONLY ONE TYPE OF SURFACE FINISH SHALL BE USED FOR POSTS AND BLOCKS IN ANY ONE CONTINUOUS LENGTH OF GUARDRAIL.

21. GLULAM POSTS AND BLOCKS WILL BE ACCEPTED AS ALTERNATIVES PROVIDED THAT THE SUPPLIED MATERIALS HAVE RECEIVED FHWA APPROVAL AND ARE CERTIFIED AS IDENTICAL TO THE SPECIMENS USED FOR TESTING AND APPROVAL.

22. PRESSURE TREATMENT OF POSTS AND BLOCKS SHALL CONFORM TO AASHTO M 133 EXCEPT THAT BLOCKS NEED NOT BE INCISED. PRESERVATION ASSAY RETENTION REPORTS SHALL BE SUBMITTED TO THE ENGINEER. THE CONTRACTOR SHALL CERTIFY THAT THE SPECIES AND GRADE MEET THE REQUIREMENTS OF THE CONTRACT.

23. W-BEAM AND THRIE-BEAM GUARDRAIL POSTS SHALL BE MANUFACTURED USING AASHTO M 270 (ASTM A 709) GRADE 36 STEEL UNLESS CORROSION RESISTANT STEEL IS REQUIRED, IN WHICH CASE THE POST SHALL BE MANUFACTURED FROM AASHTO M 270 (ASTM A 709) GRADE 50W STEEL. THE DIMENSIONS OF THE CROSS-SECTION SHALL CONFORM TO A W6 X 9 SECTION AS DEFINED IN AASHTO M 160 (ASTM A 6). W6 X 8.5 WIDE FLANGE STEEL POSTS ARE AN ACCEPTABLE ALTERNATIVE TO THE W6 X 9.

24. AFTER THE SECTION IS CUT AND ALL HOLES ARE DRILLED OR PUNCHED THE COMPONENT SHALL BE ZINC-COATED CONFORMING TO AASHTO M 111 (ASTM A 123) UNLESS CORROSION-RESISTANT STEEL IS USED. WHEN CORROSION-RESISTANT STEEL IS USED THE PORTION OF THE POST TO BE EMBEDDED IN SOIL SHALL BE ZINC-COATED CONFORMING TO AASHTO M 111 (ASTM A 123) AND THE PORTION ABOVE THE SOIL SHALL NOT BE ZINC-COATED, PAINTED OR OTHERWISE TREATED.

25. FIELD MODIFICATION TO RAIL ELEMENTS ONLY IS ALLOWED BY SAWING AND DRILLING OF HOLES. FLAME CUTTING IS NOT PERMITTED. POSTS SHALL NOT BE MODIFIED. COMPONENTS ON WHICH THE SPELTER COATING HAS BEEN DAMAGED SHALL BE EITHER REGALVANIZED OR RECOATED IN CONFORMANCE WITH AASHTO M 36, OR PAINTED WITH ONE FULL BRUSH COAT OF ZINC RICH PAINT CONFORMING TO MILITARY SPECIFICATION DOD-P-21035A.

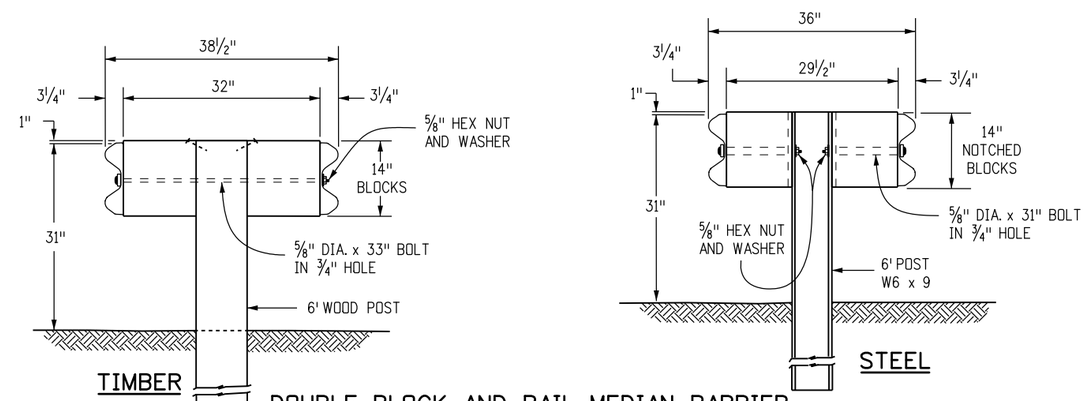

DOUBLE BLOCK AND RAIL MEDIAN BARRIER
GUARDRAIL TYPE 3 (DOUBLE)

Computer File Information		
Creation Date: 08/19/15	Initials: DLM	
Last Modification Date: 12/29/15	Initials: LTA	(R-X)
Full Path: www.codot.gov/business/designsupport		(R-X)
Drawing File Name: 6060102020.dgn		(R-X)
CAD Ver.: MicroStation V8 Scale: Not to Scale	Units: English	(R-X)

Sheet Revisions	
Date:	Comments
12/29/15	Raised guardrail height to 31". Increased offset blocks to 12". Renumbered Gen Notes.

Colorado Department of Transportation
4201 East Arkansas Avenue
CDOT HQ, 4th Floor
Denver, CO 80222
Phone: 303-757-9021 FAX: 303-757-9868
Division of Project Support DLM/LTA

MIDWEST GUARDRAIL SYSTEM (MGS) TYPE 3 W-BEAM 31 INCHES

Issued By: Project Development Branch July 4, 2012

STANDARD PLAN NO.

M-606-1

Sheet No. 2 of 20

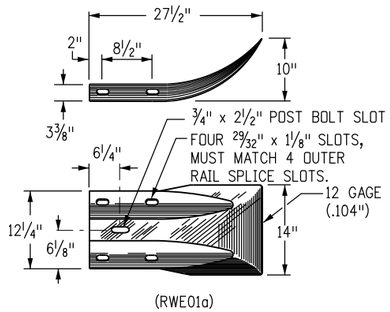

TERMINAL SECTION (FLARED)

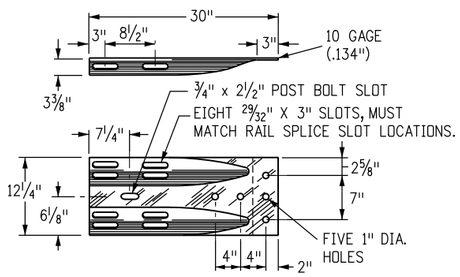

TERMINAL SECTION (CONNECTOR)

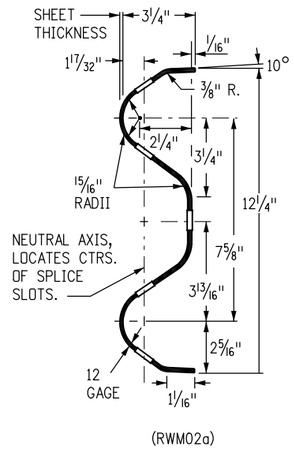

W-BEAM RAIL SECTION

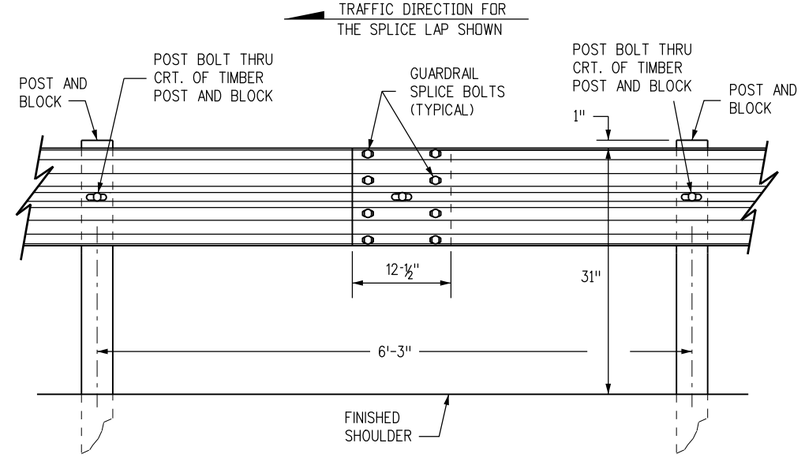

W-BEAM RAIL SPLICE

PART	MATERIAL SPEC.	GALVANIZING SPEC.	CORROSION-RESISTANT SPEC.
W-BEAM RAIL & TERMINAL SECTIONS	AASHTO M 180, CLASS A OR B	AASHTO M 180, TYPE 1 OR 2	AASHTO M 180, TYPE 4
BASE PLATE	ASTM A 36	AASHTO M 111	N.A.
NUTS, BOLTS & STUDS FOR GENERAL USE	ASTM A 307	AASHTO M 232, CLASS C OR ASTM B 695 CLASS 50 TYPE 1	
HIGH STRENGTH BOLTS & NUTS	ASTM A 325		
HIGH STRENGTH STUDS & NUTS	ASTM A 449		
ROUND STEEL WASHERS	ASTM F 436		
RECTANGULAR WASHERS	AASHTO M 180		
OTHER FITTINGS	ASTM A 36	AASHTO M 111	

THE TABULATION OF GUARDRAIL WILL SPECIFY THE TYPE OF CORROSION PROTECTION: GALVANIZED OR CORROSION - RESISTANT STEEL.

STEEL POSTS SHALL HAVE THE SAME CORROSION PROTECTION AS SPECIFIED FOR THE METAL BEAM RAIL. PUNCHING, DRILLING, CUTTING, OR WELDING OF POSTS WILL NOT BE PERMITTED AFTER GALVANIZING.

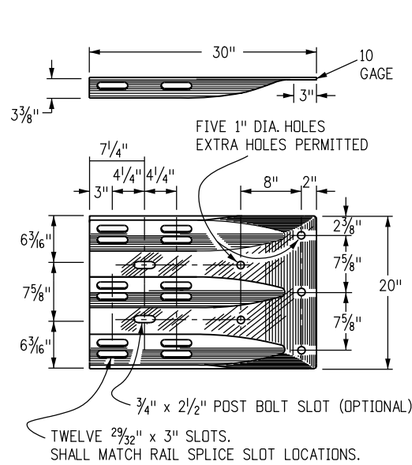

THRIE BEAM TERMINAL SECTION (CONNECTOR)

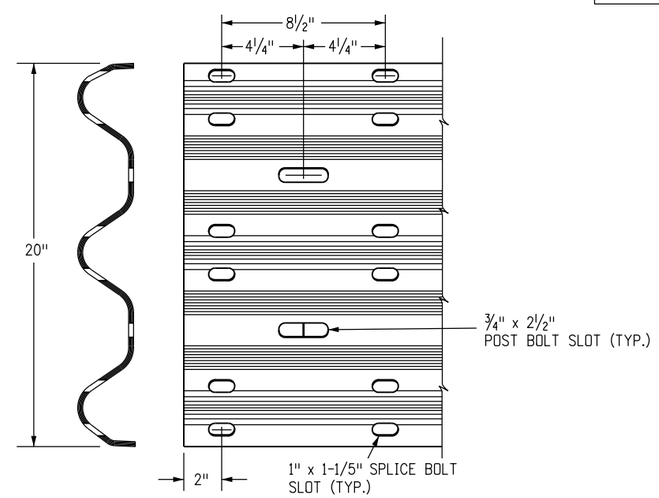

THRIE BEAM DETAIL

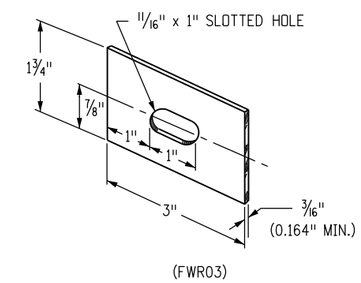

RECTANGULAR WASHER

(TO BE USED ONLY WHERE SPECIFIED.)

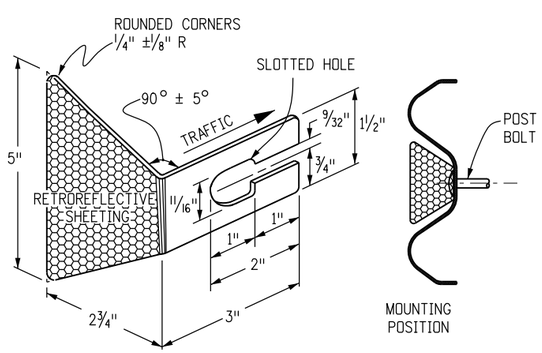

RETROREFLECTOR TAB

RETROREFLECTOR TABS SHALL BE MANUFACTURED FROM 12 TO 14 GAUGE STEEL. RETROREFLECTIVE SHEETING SHALL CONFORM TO ASTM D4956 TYPE III. SEE NOTE 7 ON SHEET 5.

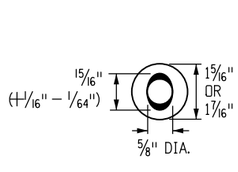

BUTTON HEAD BOLT WITH OVAL SHOULDER

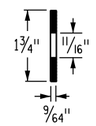

WASHER

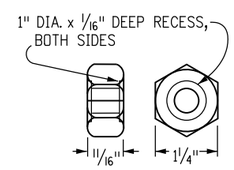

HEX NUT

DIAMETER & TYPE (INCHES)	12" BLOCKS L = LENGTH (INCHES)	THREAD LENGTH (INCHES)	INTENDED USE	AASHTO-AGC-ARTBA STANDARD NUMBER	NO. BOLTS, NUTS & WASHERS
⅝	1¼	FULL (1 1/32)	ALL RAIL SPLICES	FBB01	8 PER SPLICE*
BUTTONHEAD OVAL SHLDR.	22	MIN. 2½	SINGLE BLOCK & POST (TIMBER)	FBB04	1 PER POST
	33	MIN. 2	DOUBLE BLOCK & POST (TIMBER)	FBB05	1 PER POST
	14	MIN. 2	FASTEN NOTCHED BLOCK TO STEEL POST	FBB03	1 PER BLOCK
WASHERS NOT USED AT RAIL SPLICES					

Computer File Information		
Creation Date: 08/19/15	Initials: DLM	
Last Modification Date: 12/29/15	Initials: LTA	(R-X)
Full Path: www.codot.gov/business/designsupport		(R-X)
Drawing File Name: 6060103020.dgn		(R-X)
CAD Ver.: MicroStation V8 Scale: Not to Scale Units: English		(R-X)

Sheet Revisions	
Date:	Comments
12/29/15	Raised guardrail heights to 31" and changed splice to between posts.

Colorado Department of Transportation
4201 East Arkansas Avenue
CDOT HQ, 4th Floor
Denver, CO 80222
Phone: 303-757-9021 FAX: 303-757-9868
Division of Project Support DLM/LTA

MIDWEST GUARDRAIL SYSTEM (MGS) TYPE 3 W-BEAM 31 INCHES

Issued By: Project Development Branch July 4, 2012

STANDARD PLAN NO.

M-606-1

Sheet No. 3 of 20

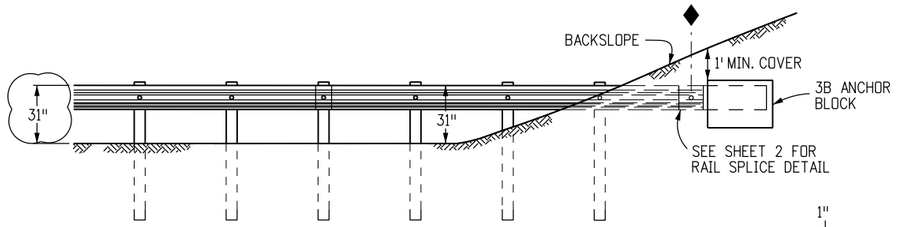

SEE TYPE 3B (RUB RAIL) PLAN VIEW FOR ALIGNMENT. THE 100 FT. FLARE LENGTH MAY BE SHORTENED IF THE SLOPE IS LESS THAN 8 FT. WIDE.

END ANCHORAGE TYPE 3B

(WITHOUT ROADSIDE DITCH AT GUARDRAIL)

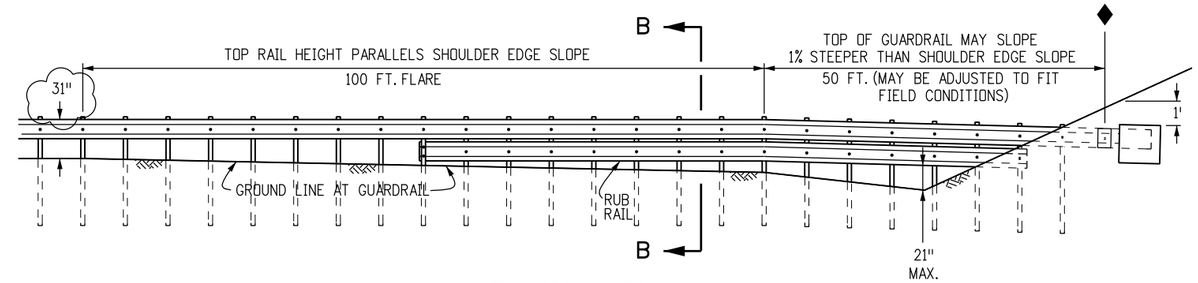

ELEVATION VIEW

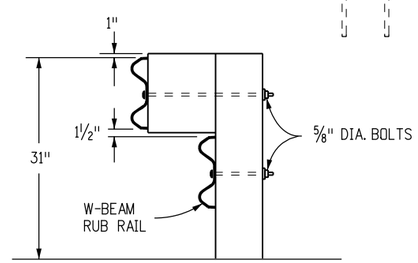

SECTION B-B

MOUNT A W-BEAM RUB RAIL 1-½ IN. BELOW THE TOP RAIL WHEN THE TOP RAIL HEIGHT EXCEEDS 33 IN. ABOVE THE GROUND

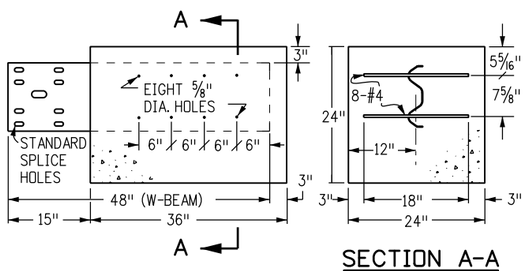

SECTION A-A

TYPE 3B ANCHOR BLOCK DETAIL

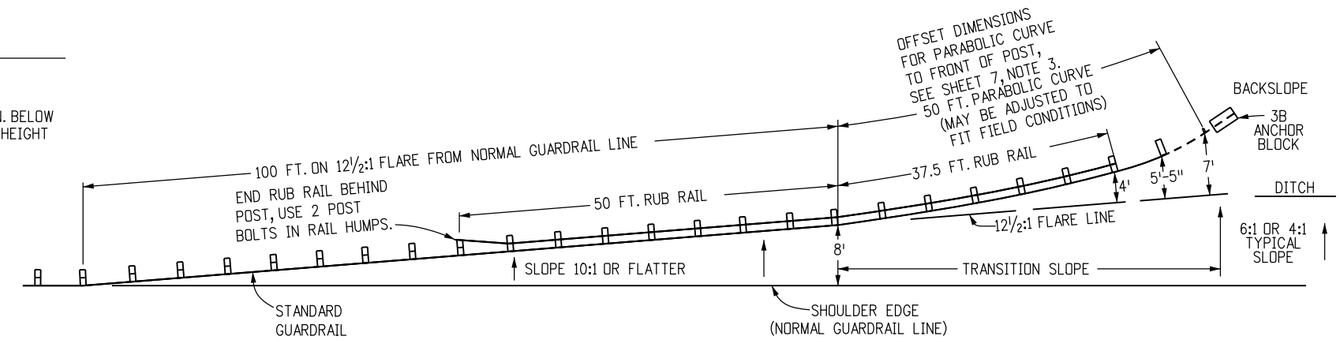

PLAN VIEW

END ANCHORAGE TYPE 3B (RUB RAIL)

(WITH ROADSIDE DITCH AT GUARDRAIL)

◆ END OF GUARDRAIL PAY LENGTH

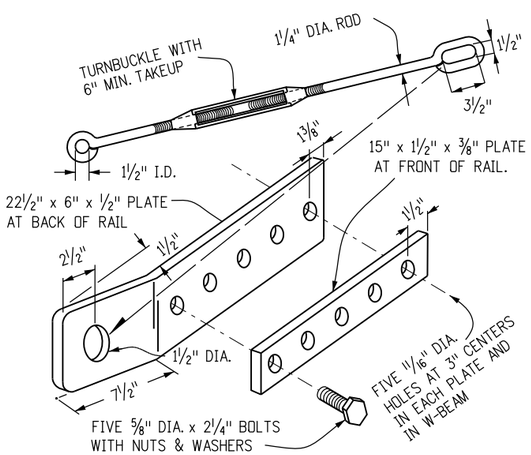

TYPE 3D HARDWARE DETAILS

NOTE: ALL PARTS SHALL BE GALVANIZED

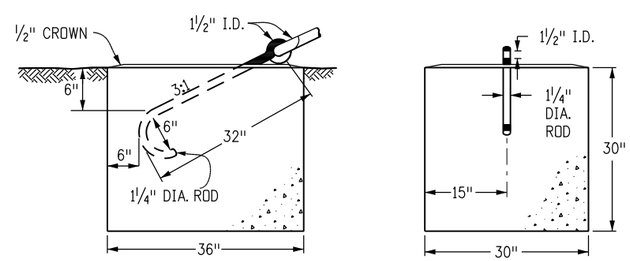

FRONT END

TYPE 3D ANCHOR BLOCK DETAIL

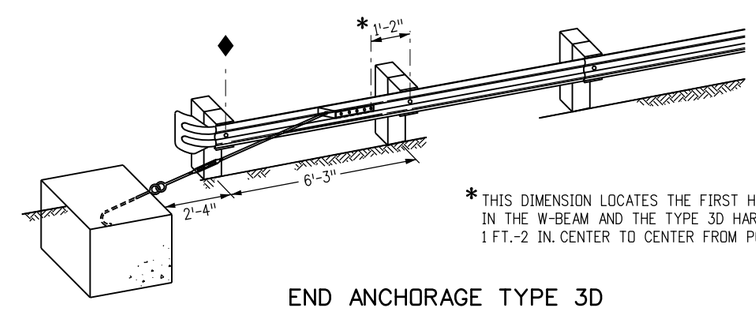

* THIS DIMENSION LOCATES THE FIRST HOLE IN THE W-BEAM AND THE TYPE 3D HARDWARE. 1 FT.-2 IN. CENTER TO CENTER FROM POST BOLT HOLE.

END ANCHORAGE TYPE 3D DEPARTURE TERMINAL

Computer File Information		Sheet Revisions	
Creation Date: 08/19/15 Initials: DLM		Date:	Comments
Last Modification Date: 12/29/15 Initials: LTA	R-X	12/29/15	Raised guardrail height to 31".
Full Path: www.codot.gov/business/designsupport	R-X		
Drawing File Name: 6060104020.dgn	R-X		
CAD Ver.: MicroStation V8 Scale: Not to Scale Units: English	R-X		

Colorado Department of Transportation
4201 East Arkansas Avenue
CDOT HQ, 4th Floor
Denver, CO 80222
Phone: 303-757-9021 FAX: 303-757-9868
Division of Project Support DLM/LTA

MIDWEST GUARDRAIL SYSTEM (MGS) TYPE 3 W-BEAM 31 INCHES

Issued By: Project Development Branch July 4, 2012

STANDARD PLAN NO.

M-606-1

Sheet No. 4 of 20

OFFSET NOTES

1. POST OFFSET DIMENSIONS ARE GIVEN TO THE CENTER OF THE TRAFFIC FACE OF POSTS, EXCEPT AT POSTS (7) & (8), WHERE DIMENSION IS TO CENTER OF THE TRAFFIC FACE OF THE BLOCKOUTS.
2. THE GUARDRAIL BETWEEN POST (1) THRU (7) IS ON A STRAIGHT LINE FLARE.

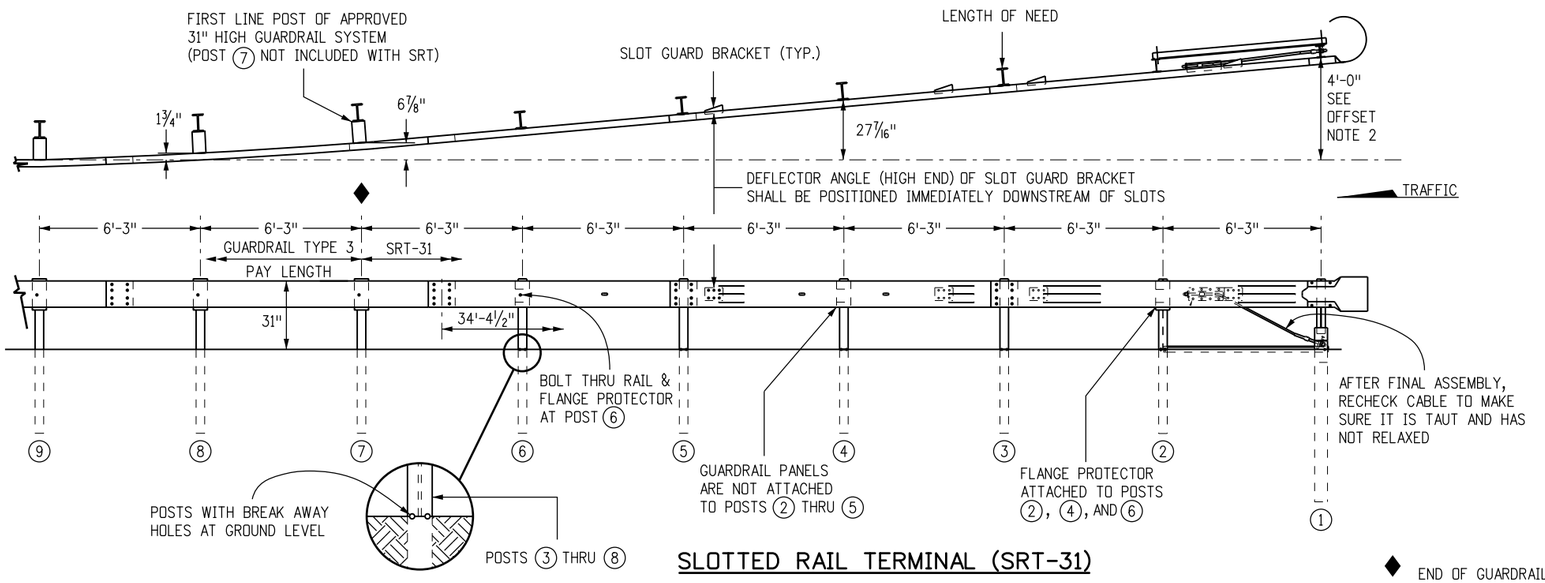

SLOTTED RAIL TERMINAL (SRT-31)

◆ END OF GUARDRAIL PAY LENGTH

NOTES

1. THE END ANCHORAGES (FLARED) SHALL EITHER BE THE SLOTTED RAIL TERMINAL SRT-31 OR SRT-M10 AS MANUFACTURED BY TRINITY INDUSTRIES, INC. (TELEPHONE #: 800-772-7976), THE FLEAT-350, AS MANUFACTURED BY ROAD SYSTEMS INC. (TELEPHONE #: 432-263-2435), OR THE X-LITE AS MANUFACTURED BY BARRIER SYSTEMS, INC. (TELEPHONE #: 888-800-3691). ONE END ANCHORAGE (FLARED) SHALL INCLUDE ALL POST, RAIL, AND ALL HARDWARE ITEMS REQUIRED FOR A COMPLETE UNIT. THE END ANCHORAGE (FLARES) SHALL BE INSTALLED CONFORMING TO THE MANUFACTURER'S RECOMMENDATIONS. THE CONTRACTOR SHALL PROVIDE A COPY OF THE MANUFACTURER'S INSTALLATION INSTRUCTIONS AND PARTS LIST TO THE ENGINEER PRIOR TO INSTALLATION OF THE DEVICE.
2. IN HEAVY SNOW LOCATIONS, TRIM POSTS (1) AND (2) (IF THEY ARE WOODEN) FLUSH WITH RAIL TOP AND TREAT END WITH SEALANT, IN CONFORMANCE WITH AASHTO M 133.
3. POSTS SHALL BE DRILLED FOR BREAKAWAY ACCORDING TO THE MANUFACTURER'S INSTRUCTIONS.
4. SEE SHEETS 1, 3 AND 4 FOR STANDARD GUARDRAIL TYPE 3 AND INSTALLATION DETAILS.
5. RETROREFLECTOR TABS SHALL NOT BE USED ON END TERMINAL POSTS.
6. HINGED BREAK AWAY (HBA) STEEL POSTS MAY BE USED AS AN ALTERNATIVE. SEE MANUFACTURER'S DETAILS.
7. DELINEATION SHALL BE APPLIED TO THE END PIECE, AND SHALL NOT BE PAID FOR SEPARATELY BUT SHALL BE INCLUDED IN THE WORK.

OFFSET NOTES

1. POST OFFSET DIMENSION IS GIVEN TO THE CENTER OF THE TRAFFIC FACE OF POST (1).
2. THE GUARDRAIL BETWEEN POSTS (1) THRU (11) IS ON A STRAIGHT LINE FLARE.

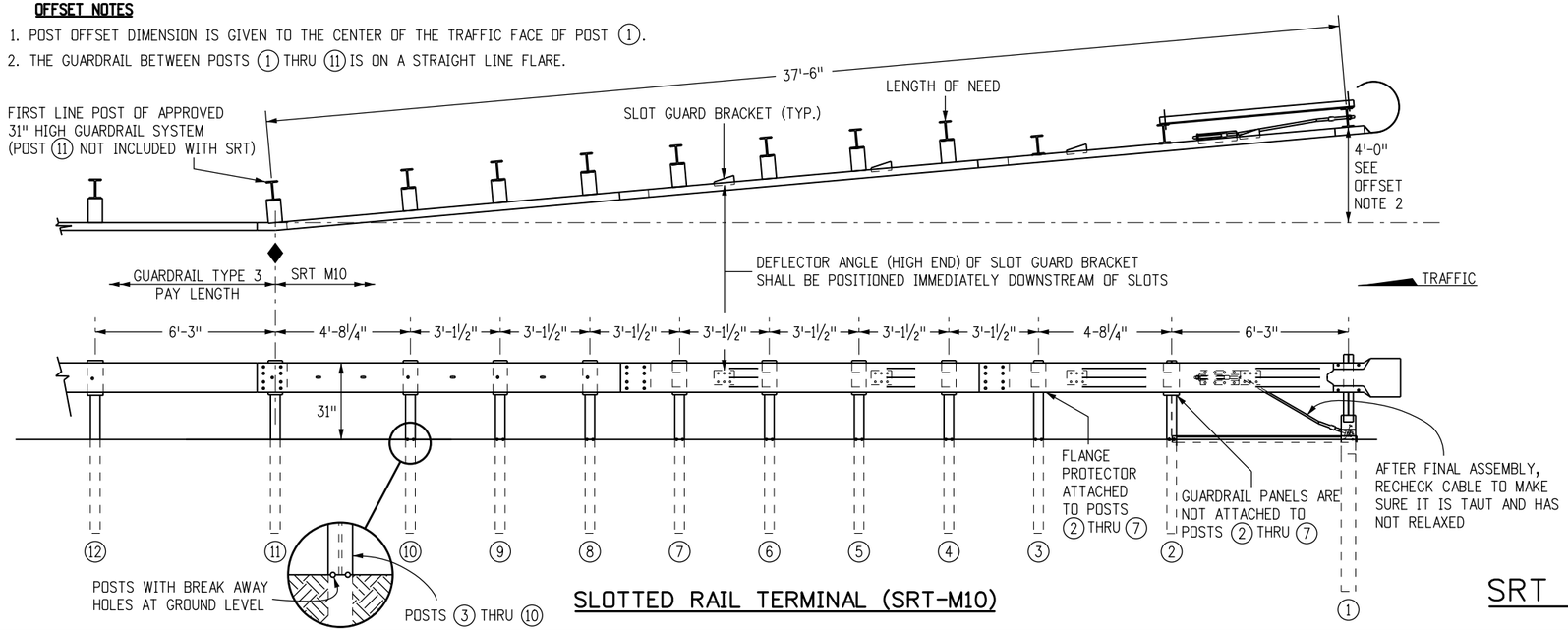

SLOTTED RAIL TERMINAL (SRT-M10)

SRT END ANCHORAGES (FLARED)

Computer File Information		Sheet Revisions		Colorado Department of Transportation	MIDWEST GUARDRAIL SYSTEM (MGS) TYPE 3 W-BEAM 31 INCHES	STANDARD PLAN NO.
Creation Date: 08/19/15 Initials: DLM		Date:	Comments	4201 East Arkansas Avenue CDOT HQ, 4th Floor Denver, CO 80222 Phone: 303-757-9021 FAX: 303-757-9868		M-606-1
Last Modification Date: 12/29/15 Initials: LTA	(R-X)	12/29/15	New SRT End Anchorages 31" high.			
Full Path: www.codot.gov/business/designsupport	(R-X)					
Drawing File Name: 6060105020.dgn	(R-X)					
CAD Ver.: MicroStation V8 Scale: Not to Scale Units: English	(R-X)			Division of Project Support DLM/LTA	Issued By: Project Development Branch July 4, 2012	Sheet No. 5 of 20

SEE M-606-1, SHEET 5 OF 20, FOR "NOTES".

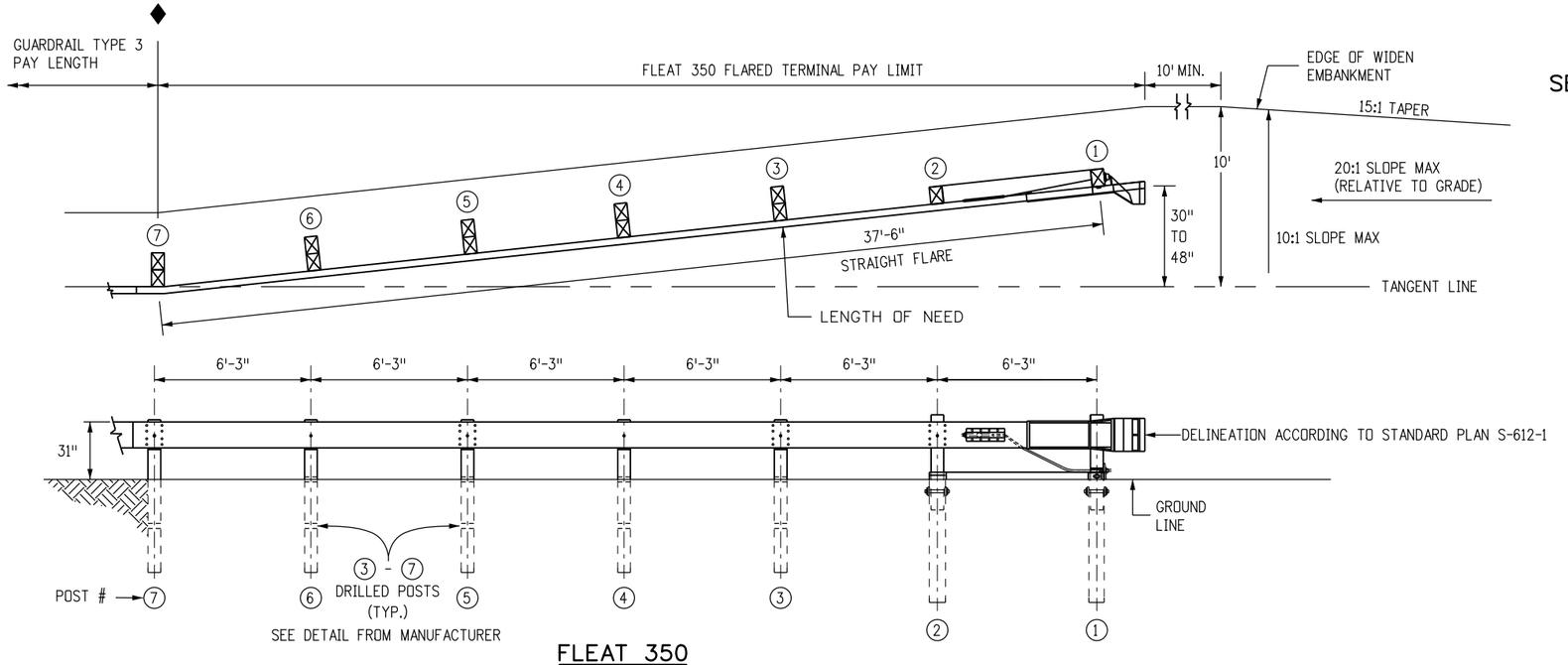

FLEAT 350

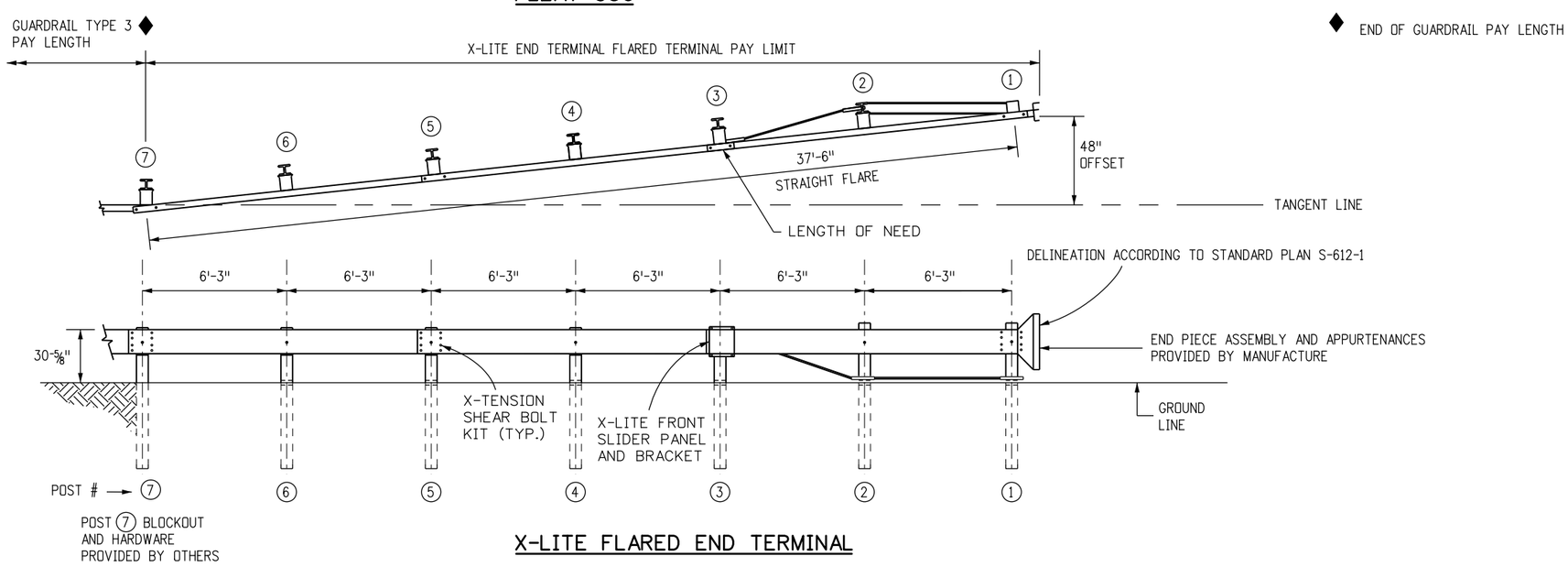

X-LITE FLARED END TERMINAL

END ANCHORAGES (FLARED)

Computer File Information		
Creation Date: 08/19/15	Initials: DLM	
Last Modification Date: 12/29/15	Initials: LTA	R-X
Full Path: www.codot.gov/business/designsupport		R-X
Drawing File Name: 6060106020.dgn		R-X
CAD Ver.: MicroStation V8 Scale: Not to Scale	Units: English	R-X

Sheet Revisions	
Date:	Comments
12/29/15	Raised End Anchorages to 31".

Colorado Department of Transportation
4201 East Arkansas Avenue
CDOT HQ, 4th Floor
Denver, CO 80222
Phone: 303-757-9021 FAX: 303-757-9868
Division of Project Support DLM/LTA

MIDWEST
GUARDRAIL SYSTEM (MGS)
TYPE 3 W-BEAM 31 INCHES

Issued By: Project Development Branch July 4, 2012

STANDARD PLAN NO.
M-606-1
Sheet No. 6 of 20

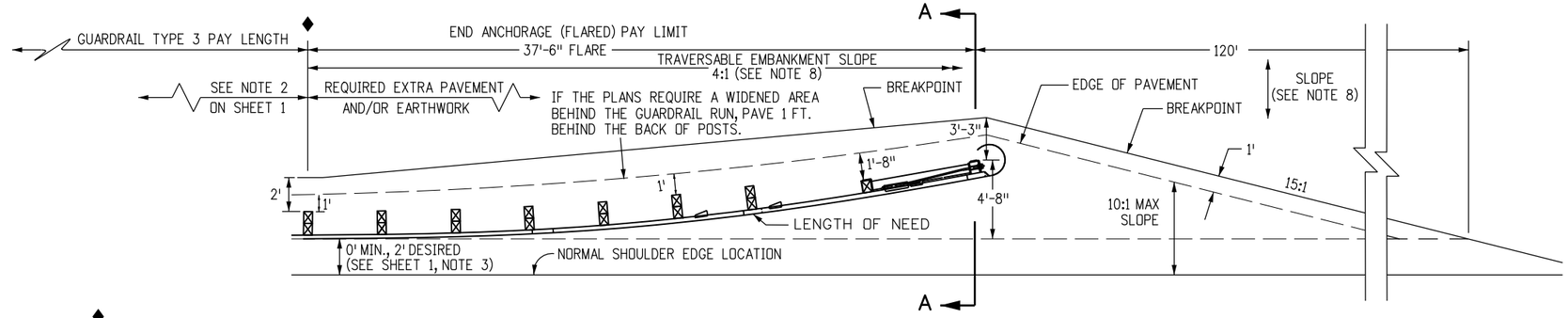

PLAN VIEW
WIDENING FOR END ANCHORAGE (FLARED) *

* THIS PLAN VIEW SHOWS ONLY THE SRT-31. THE FLEAT-350 USES THE SAME WIDENING DETAILS.

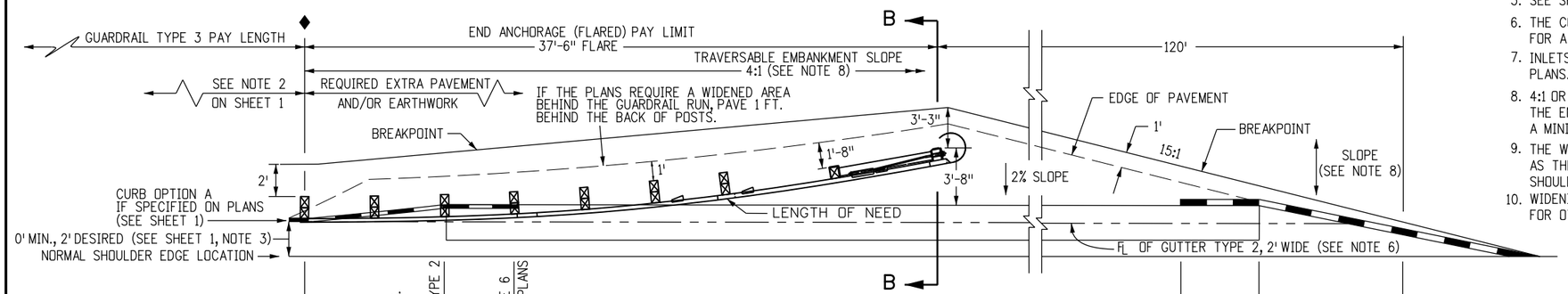

PLAN VIEW
WIDENING FOR END ANCHORAGE (FLARED) WITH CURB OPTION A *

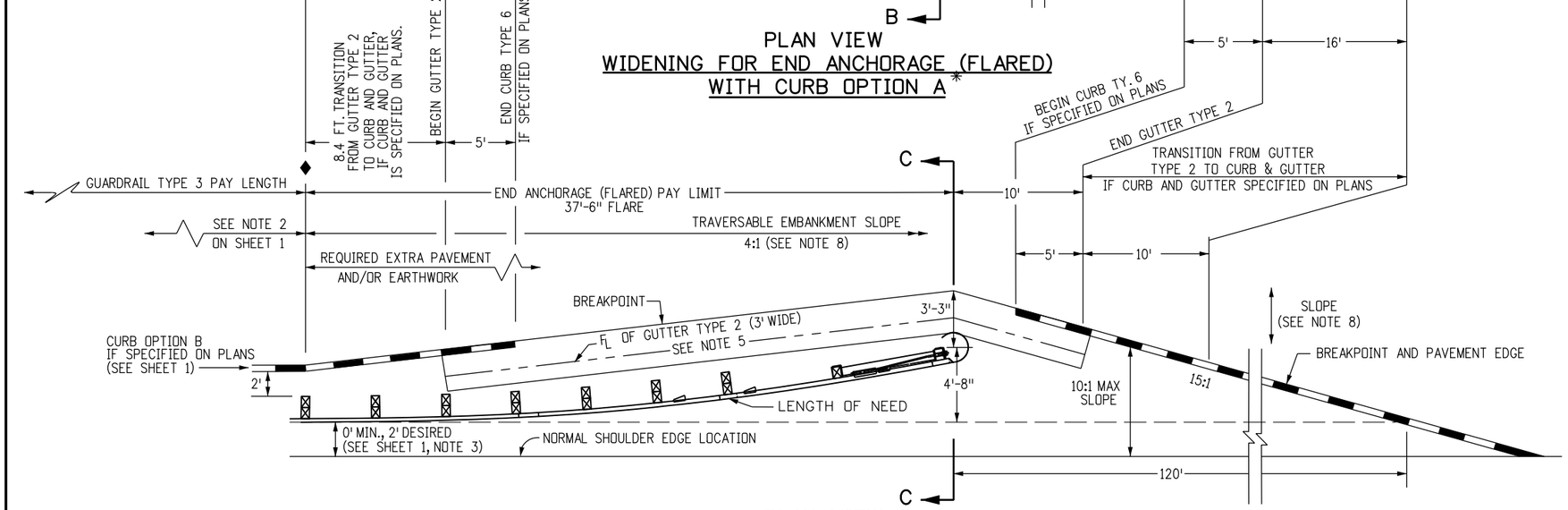

PLAN VIEW
WIDENING FOR END ANCHORAGE (FLARED) WITH CURB OPTION B *

NOTES

1. PAYMENT FOR THE ADDED EMBANKMENT (APPROXIMATELY 45 CU. YDS.) FOR THE FLARE SHALL BE AS FOLLOWS:
   A. UNDER PAY ITEM 203 WHEN THE CONTRACT PLAN INCLUDES PAY ITEM 203
   B. INCLUDED IN THE COST OF THE END ANCHORAGE (FLARED) WHEN THE CONTRACT PLANS DO NOT INCLUDE PAY ITEM 203. THE ADDED EMBANKMENT SHALL BE CONSTRUCTED IN ACCORDANCE WITH SUBSECTION 203.07, AASHTO T 99.
2. WHEN THE WIDENED AREA IS PAVED, PAYMENT FOR THE PAVEMENT (APPROX. 70 SQ. YDS.) SHALL BE AS FOLLOWS:
   A. UNDER PAY ITEM 403 OR 412 WHEN THE CONTRACT PLAN INCLUDES PAY ITEM 403 OR 412
   B. INCLUDED IN THE COST OF THE END ANCHORAGE (FLARED) WHEN THE CONTRACT PLAN DOES NOT INCLUDE PAY ITEM 403 OR 412 (SEE SHEET 1, NOTE 2 FOR PAVEMENT TYPES)
3. CONCRETE PAVED AREAS SHALL HAVE THEIR TAPERED ENDS SQUARED OFF AS DIRECTED BY THE ENGINEER.
4. WHEN OVERLAY PAVING, THE FINISHED SURFACE AT EACH POST SHALL NOT BE ABOVE THE TOP BREAKAWAY HOLE OR STRUT ASSEMBLY. THE WIDENED AREA AT THE FLARED END ANCHORAGE SHOULD NOT BE OVERLAYED UNLESS PAVEMENT CONDITIONS WARRANT IT BEING OVERLAYED. ANY OVERLAY PAVEMENT ABUTTING THE FLARED END ANCHORAGE SHALL BE TAPERED TO PREVENT A DROP IN THE PAVED SURFACE BELOW THE RAIL.
5. SEE SHEETS 1, 3 AND 4 FOR STANDARD TYPE 3 GUARDRAIL AND INSTALLATION DETAILS.
6. THE COST OF THE GUTTER WILL BE PAID FOR AS "GUTTER TYPE 2 (2 FT.)" FOR A LENGTH OF 134 FT. OR "GUTTER TY. 2 (3 FT.)" FOR A LENGTH OF 40 FT.
7. INLETS OR RUNDOWNS MAY BE USED INSTEAD OF THE GUTTER IF SPECIFIED ON THE PLANS. NO ADDITIONAL CURB SHALL BE ADDED IN THE VICINITY OF THE END ANCHORAGE.
8. 4:1 OR FLATTER SLOPES IN THE TRAVERSABLE AREA SHALL BE USED BEHIND THE END ANCHORAGE, AND IN ADVANCE OF POST 1. IF THIS IS NOT POSSIBLE, A MINIMUM 3:1 SLOPE MAY BE USED IF APPROVED BY THE ENGINEER.
9. THE WIDENED AREA, EXCEPT FOR CURB OPTION A, SHALL HAVE THE SAME GRADING AS THE ADJACENT GUARDRAIL: 10:1 OR FLATTER IF MORE THAN 2 FT. FROM SHOULDER OR SLOPE EQUAL TO ROADWAY SLOPE IF 2 FT. OR LESS FROM SHOULDER.
10. WIDENING FOR END ANCHORAGES SHALL BE PAVED ON INTERSTATES AND FREEWAYS. FOR OTHER HIGHWAYS, PAVING SHALL BE AS SHOWN ON THE PLANS.

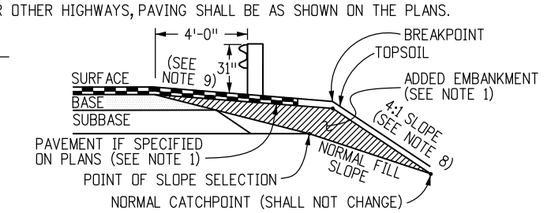

SECTION A-A

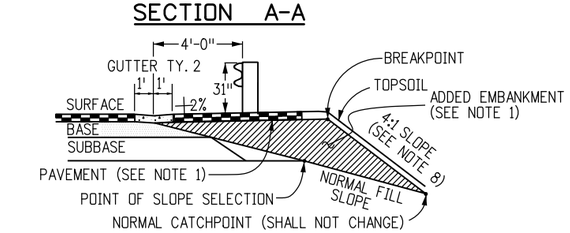

SECTION B-B

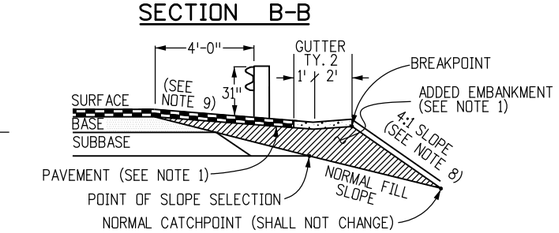

SECTION C-C

Computer File Information		
Creation Date: 08/19/15	Initials: DLM	
Last Modification Date: 12/29/15	Initials: LTA	(R-X)
Full Path: www.codot.gov/business/designsupport		(R-X)
Drawing File Name: 6060107020.dgn		(R-X)
CAD Ver.: MicroStation V8 Scale: Not to Scale	Units: English	(R-X)

Sheet Revisions	
Date:	Comments
12/29/15	Raised guardrail height to 31".

Colorado Department of Transportation
4201 East Arkansas Avenue
CDOT HQ, 4th Floor
Denver, CO 80222
Phone: 303-757-9021 FAX: 303-757-9868
Division of Project Support DLM/LTA

MIDWEST
GUARDRAIL SYSTEM (MGS)
TYPE 3 W-BEAM 31 INCHES

Issued By: Project Development Branch July 4, 2012

STANDARD PLAN NO.
M-606-1
Sheet No. 7 of 20

NOTES FOR NONFLARED

1. THE END ANCHORAGE (NONFLARED) SHALL EITHER BE THE SKT GUARDRAIL AS MANUFACTURED BY ROAD SYSTEMS, INC. (TEL. #: 432-263-2435), OR THE X-LITE AS MANUFACTURED BY BARRIER SYSTEMS, INC. (TEL. #: 888-800-3691), OR THE SOFTSTOP AS MANUFACTURED BY TRINITY INDUSTRIES , INC. (TEL. # : 800-772-7976). THE END ANCHORAGE (NONFLARED) SHALL INCLUDE ALL POST, RAIL, AND HARDWARE ITEMS REQUIRED FOR A COMPLETE UNIT. THE END ANCHORAGE (NONFLARED) SHALL BE INSTALLED CONFORMING TO THE MANUFACTURER'S RECOMMENDATIONS. THE CONTRACTOR SHALL PROVIDE A COPY OF THE MANUFACTURER'S INSTALLATION INSTRUCTIONS AND PARTS LIST TO THE ENGINEER PRIOR TO THE INSTALLATION OF THE DEVICE.
2. WOOD POSTS SHALL BE DRILLED FOR BREAKAWAY CONFORMING TO THE MANUFACTURER'S INSTRUCTIONS.
3. HINGED BREAK AWAY (HBA) STEEL POSTS MAY BE USED CONFORMING TO THE MANUFACTURER'S INSTRUCTIONS.
4. RETROREFLECTOR TABS SHALL NOT BE USED ON THE LAST SEVEN POSTS OF THE END ANCHORAGE (NONFLARED).
5. USE THE MANUFACTURER'S SPECIFIED STEEL FOUNDATION TUBE FOR POSTS 1 AND 2 FOR SKT END ANCHORAGES (NONFLARED).
6. USE THE MANUFACTURE'S SUPPLIED POSTS FOR X-LITE END ANCHORAGE AS FOLLOWS:
   POST 1 - X-LITE, CRIMPED POST SLOTS, GALVANIZED.
   POST 2 - X-LITE, POST II, GALVANIZED.
   POST 3 - X-LITE, CRIMPED POST HOLES, GALVANIZED.
   FOR POSTS 4 THRU 8 - USE STANDARD LINE POST, GALVANIZED.
7. DELINEATION SHALL BE APPLIED TO THE END PIECE AND SHALL NOT BE PAID FOR SEPARATELY BUT BE INCLUDED IN THE COST OF THE WORK. SEE STANDARD PLAN S-612-1.

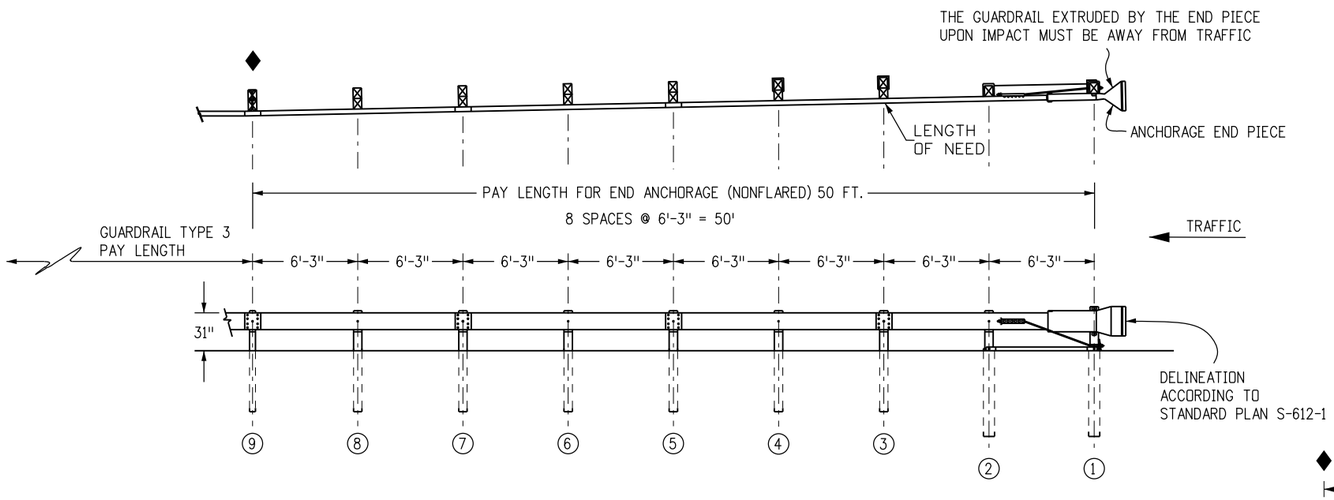

SKT END ANCHORAGE (NONFLARED)

END OF GUARDRAIL PAY LENGTH

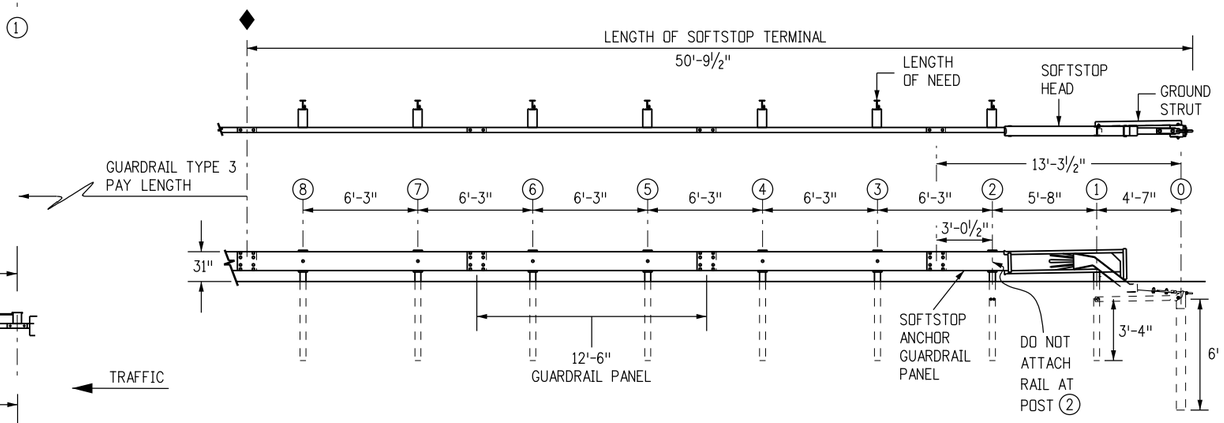

SOFTSTOP TERMINAL END ANCHORAGE (NONFLARED)

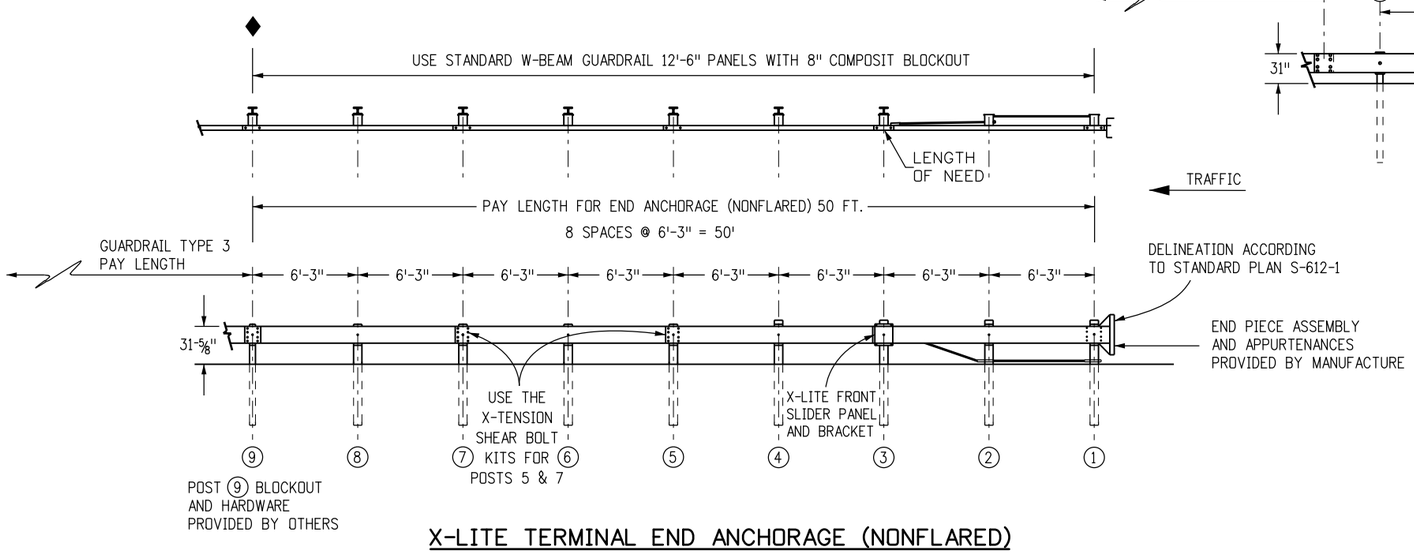

X-LITE TERMINAL END ANCHORAGE (NONFLARED)

END ANCHORAGES (NONFLARED)

Computer File Information			Sheet Revisions	
Creation Date: 08/19/15 Initials: DLM			Date:	Comments
Last Modification Date: 12/29/15 Initials: LTA	R-X	R-X	12/29/15	Raised End Anchorages to 31".
Full Path: www.codot.gov/business/designsupport	R-X	R-X		
Drawing File Name: 60600108020.dgn	R-X	R-X		
CAD Ver.: MicroStation V8 Scale: Not to Scale Units: English	R-X	R-X		

Colorado Department of Transportation
4201 East Arkansas Avenue
CDOT HQ, 4th Floor
Denver, CO 80222
Phone: 303-757-9021 FAX: 303-757-9868
Division of Project Support DLM/LTA

MIDWEST GUARDRAIL SYSTEM (MGS) TYPE 3 W-BEAM 31 INCHES

Issued By: Project Development Branch July 4, 2012

STANDARD PLAN NO.

M-606-1

Sheet No. 8 of 20

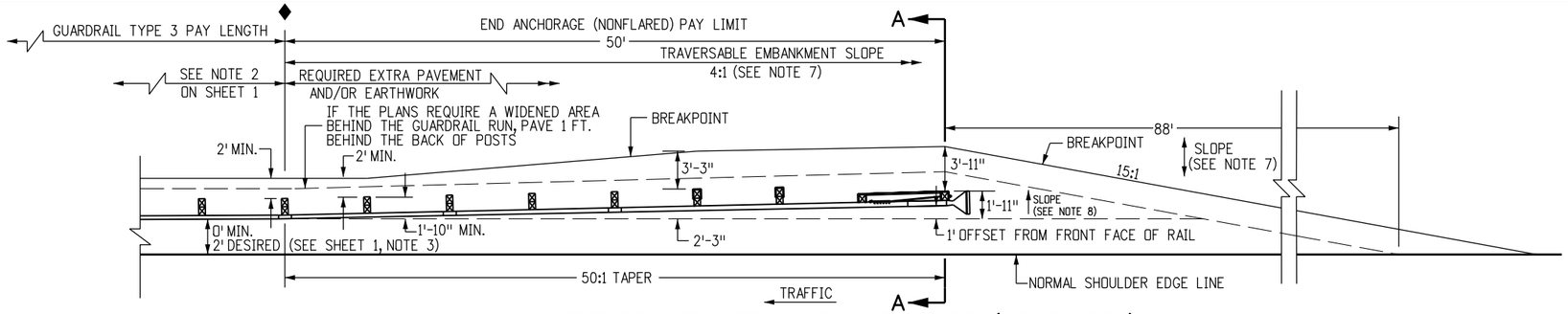

WIDENED AREA FOR END ANCHORAGE (NONFLARED)
PLAN VIEW

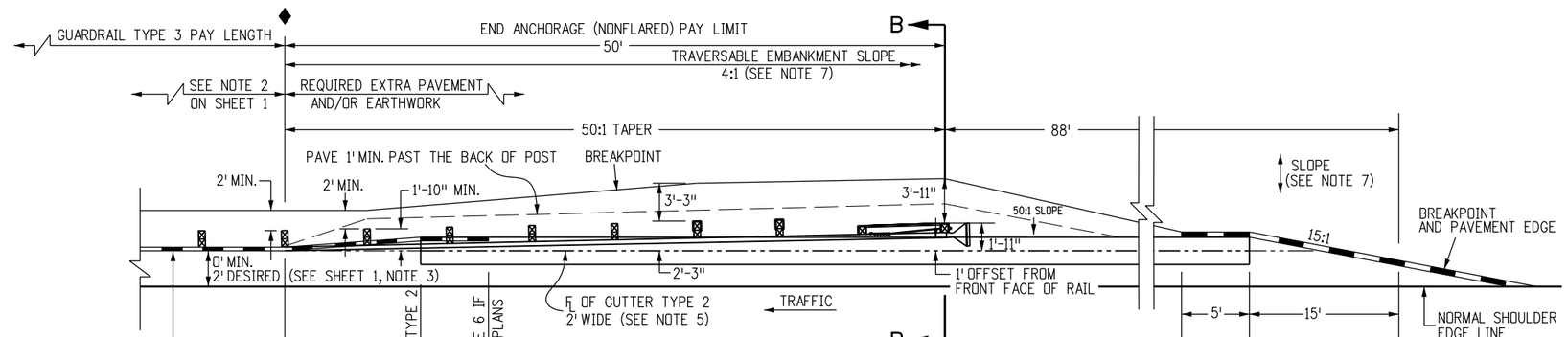

WIDENED AREA FOR END ANCHORAGE (NONFLARED)
WITH CURB OPTION A
PLAN VIEW

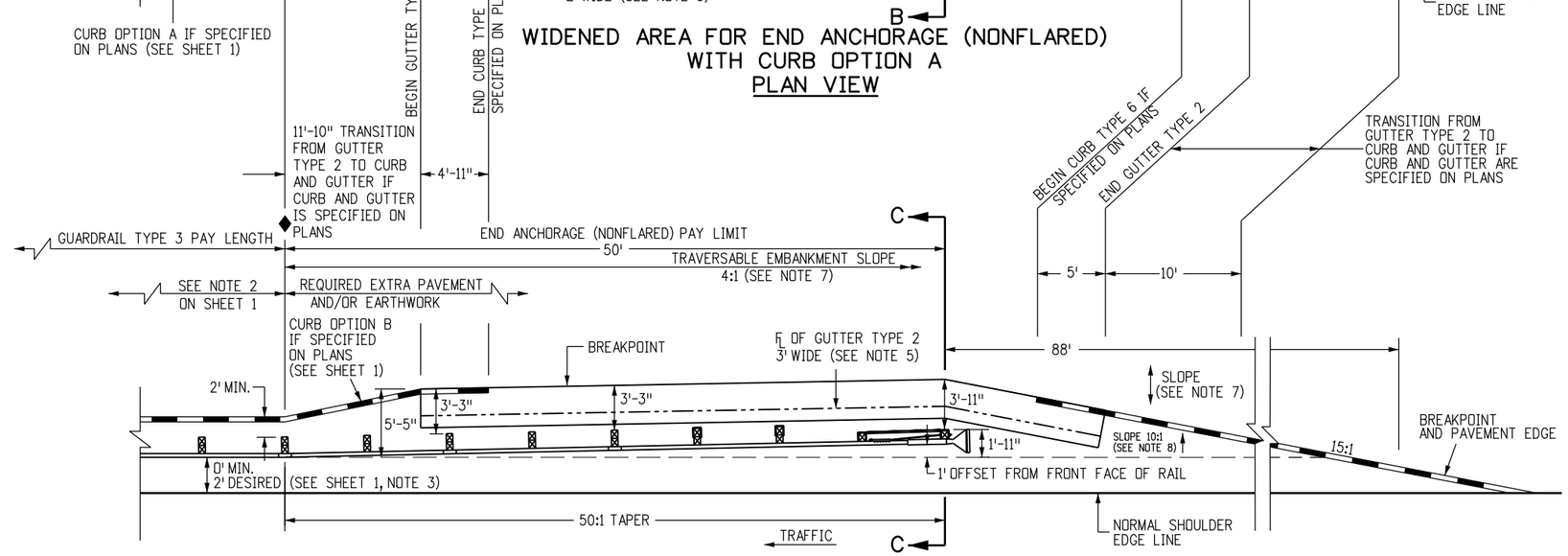

WIDENED AREA FOR END ANCHORAGE (NONFLARED) WITH CURB OPTION B
PLAN VIEW

NOTES

1. PAYMENT FOR THE ADDED EMBANKMENT (APPROXIMATELY 25 CU. YDS.) FOR THE FLARE SHALL BE AS FOLLOWS:
   A. UNDER PAY ITEM 203 WHEN THE CONTRACT PLAN INCLUDES PAY ITEM 203.
   B. INCLUDED IN THE COST OF THE END ANCHORAGE (NONFLARED) WHEN THE CONTRACT PLANS DOES NOT INCLUDE PAY ITEM 203. THE ADDED EMBANKMENT SHALL BE BE CONSTRUCTED IN ACCORDANCE WITH SUBSECTION 203.07, AASHTO T 99.
2. WHEN THE WIDENED AREA IS PAVED, PAYMENT FOR THE PAVEMENT (APPROX. 39 SQ. YDS.) SHALL BE AS FOLLOWS:
   A. UNDER PAY ITEM 403 OR 412 WHEN THE CONTRACT PLAN INCLUDES PAY ITEM 403 OR 412.
   B. INCLUDED IN THE COST OF THE END ANCHORAGE (NONFLARED) WHEN THE CONTRACT PLAN DOES NOT INCLUDE PAY ITEM 403 OR 412, (SEE SHEET 1, NOTE 2 FOR PAYMENT TYPES).
3. WHEN OVERLAY PAVING, THE FINISHED SURFACE AT EACH POST SHALL NOT BE ABOVE THE TOP BREAKWAY HOLE OR STRUT ASSEMBLY. THE WIDENED AREA AT THE END ANCHORAGE (NONFLARED) SHALL NOT BE OVERLAYED UNLESS PAVEMENT CONDITIONS WARRANT IT BEING OVERLAYED. ANY OVERLAY PAVEMENT ABUTTING THE END ANCHORAGE (NONFLARED) SHALL BE TAPERED TO PREVENT A DROP IN THE PAVED SURFACE BELOW THE RAIL.
4. SEE SHEETS 1, 2 AND 3 FOR STANDARD TYPE 3 GUARDRAIL AND INSTALLATIONS DETAILS.
5. THE COST OF THE GUTTER WILL BE PAID FOR AS "GUTTER TYPE 2 (2 FT.)" FOR A LENGTH OF 111 FT., OR "GUTTER TY. 2 (3 FT.)" FOR A LENGTH OF 50 FT.
6. INLETS OR RUNDOWNS MAY BE USED INSTEAD OF THE GUTTER IF SPECIFIED ON THE PLANS. NO ADDITIONAL CURB SHALL BE ADDED IN THE VICINITY OF THE END TREATMENT.
7. 4:1 OR FLATTER SLOPES IN THE TRAVERSABLE AREA SHALL BE USED BEHIND THE END ANCHORAGE AREA, AND IN ADVANCE OF POST 1. IF THIS IS NOT POSSIBLE A MINIMUM 3:1 SLOPE MAY BE USED IF APPROVED BY THE ENGINEER.
8. THE WIDENED AREA, EXCEPT FOR CURB OPTION A, SHALL HAVE THE SAME GRADING AS BENEATH THE ADJACENT GUARDRAIL: 10:1 OR FLATTER IF MORE THAN 2 FT. FROM SHOULDER, OR SLOPE EQUAL TO ROADWAY SLOPE IF 2 FT. OR LESS FROM SHOULDER.
9. WIDENING FOR END ANCHORAGES SHALL BE PAVED ON INTERSTATES AND FREEWAYS. FOR OTHER HIGHWAYS, PAVING SHALL BE AS SHOWN ON THE PLANS.
10. HINGED BREAK AWAY (HBA) STEEL POSTS MAY BE USED. SEE MANUFACTURER'S DETAILS.

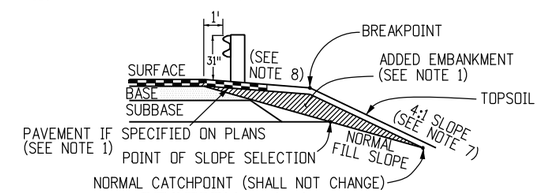

SECTION A-A

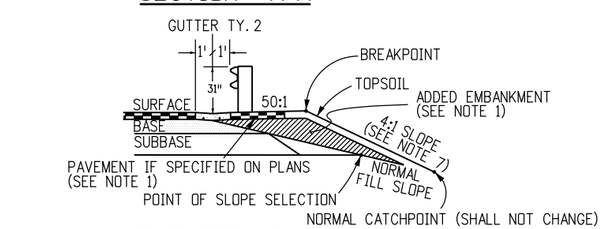

SECTION B-B

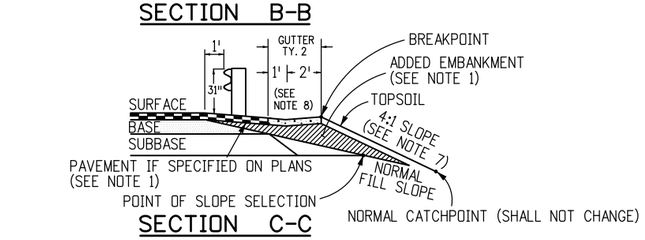

SECTION C-C

Computer File Information		
Creation Date: 08/19/15	Initials: DLM	
Last Modification Date: 12/29/15	Initials: LTA	(R-X)
Full Path: www.codot.gov/business/designsupport		(R-X)
Drawing File Name: 6060109020.dgn		(R-X)
CAD Ver.: MicroStation V8 Scale: Not to Scale Units: English		(R-X)

Sheet Revisions	
Date:	Comments
12/29/15	Raised guardrail height to 31".

Colorado Department of Transportation
4201 East Arkansas Avenue
CDOT HQ, 4th Floor
Denver, CO 80222
Phone: 303-757-9021 FAX: 303-757-9868
Division of Project Support DLM/LTA

MIDWEST
GUARDRAIL SYSTEM (MGS)
TYPE 3 W-BEAM 31 INCHES

Issued By: Project Development Branch July 4, 2012

STANDARD PLAN NO.
M-606-1
Sheet No. 9 of 20

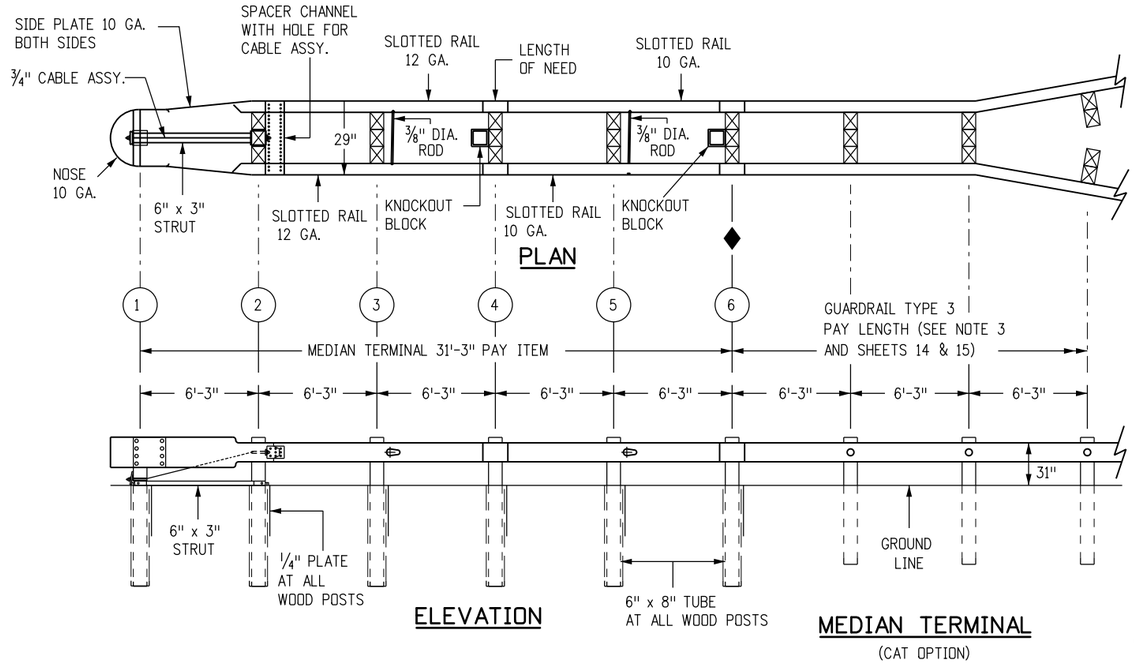

MEDIAN TERMINAL NOTES

1. THE MEDIAN TERMINAL SHALL BE THE CAT 350 AS MANUFACTURED BY TRINITY INDUSTRIES INC. (TEL #: 800-722-7976), OR THE BRAKEMASTER AS MANUFACTURED BY ENERGY ABSORPTION SYSTEMS, INC. AS DISTRIBUTED BY INTERWEST SAFETY SUPPLY (TEL #: 303-733-8447), OR THE FLEAT-MT MEDIAN TERMINAL AS MANUFACTURED BY ROAD SYSTEM INC. (TEL. #: 432-263-2435).
2. ONE MEDIAN TERMINAL SHALL INCLUDE ALL POSTS, RAIL, AND HARDWARE ITEMS REQUIRED FOR A COMPLETE UNIT. THE DEVICE SHALL BE INSTALLED IN CONFORMANCE WITH THE MANUFACTURER'S INSTRUCTIONS. THE CONTRACTOR SHALL PROVIDE A COPY OF THE MANUFACTURER'S INSTALLATION INSTRUCTIONS AND PARTS LISTS TO THE ENGINEER PRIOR TO THE INSTALLATION OF THE DEVICE.
3. UNLESS OTHERWISE SPECIFIED ON THE PLANS, THE MEDIAN TERMINAL SHALL BE INSTALLED FOR BIDIRECTIONAL TRAFFIC APPLICATION.
4. MEDIAN GUARDRAIL POSTS MAY BE STEEL OR WOOD.
5. EACH INSTALLATION SHALL BE SUPERVISED AND CERTIFIED AS CORRECT UPON COMPLETION BY A REPRESENTATIVE OF THE DEVICE MANUFACTURER OR BY AN EMPLOYEE OF THE CONTRACTOR WHO IS A CERTIFIED INSTALLER. THE CERTIFIED INSTALLER SHALL HAVE COMPLETED DEVICE TRAINING AND SHALL BE REGISTERED WITH THE MANUFACTURER AS A CERTIFIED INSTALLER.
6. DELINEATION, IF REQUIRED, SHALL BE APPLIED TO THE END PIECE AND WILL NOT BE PAID FOR SEPARATELY BUT SHALL BE INCLUDED IN THE COST OF THE WORK. SEE STANDARD PLAN S-612-1.
7. IF THE MEDIAN TERMINAL IS LESS THAN 31 INCHES HIGH, A TRANSITIONAL PIECE SHALL BE INSTALLED TO REACH THE 31 INCHES MGS HEIGHT.

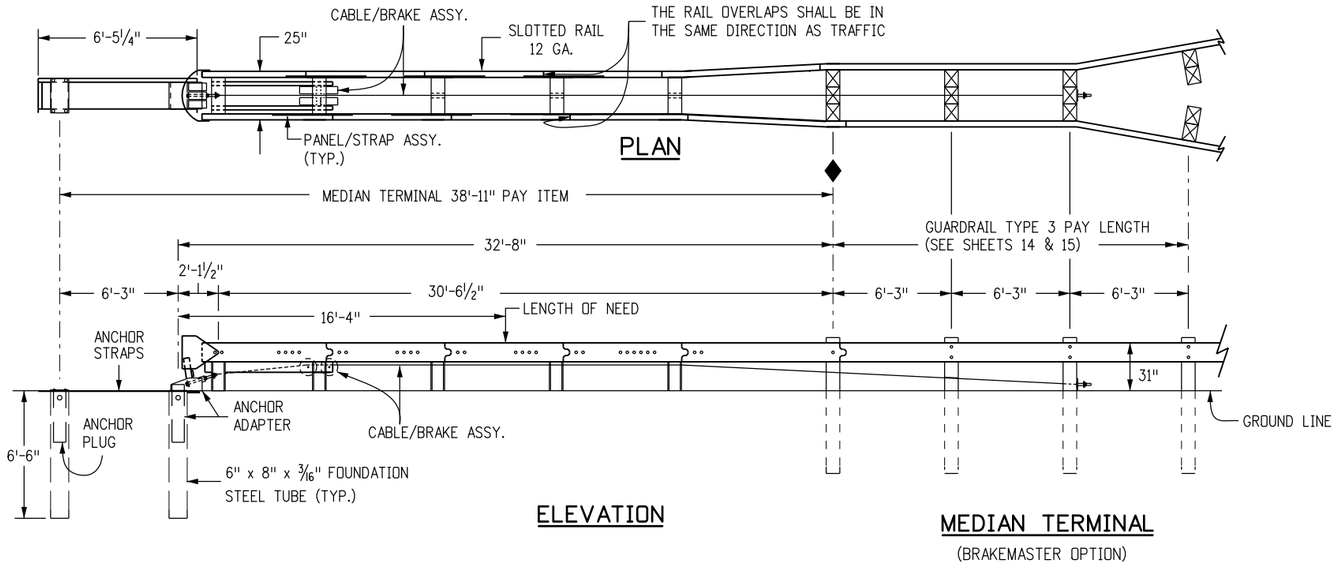

Computer File Information		
Creation Date: 08/19/15	Initials: DLM	
Last Modification Date: 12/29/15	Initials: LTA	(R-X)
Full Path: www.codot.gov/business/designsupport		(R-X)
Drawing File Name: 60601010020.dgn		(R-X)
CAD Ver.: MicroStation V8 Scale: Not to Scale Units: English		(R-X)

Sheet Revisions	
Date:	Comments
12/29/15	Raised guardrail height to 31".

Colorado Department of Transportation
4201 East Arkansas Avenue
CDOT HQ, 4th Floor
Denver, CO 80222
Phone: 303-757-9021 FAX: 303-757-9868
Division of Project Support DLM/LTA

MIDWEST GUARDRAIL SYSTEM (MGS) TYPE 3 W-BEAM 31 INCHES

Issued By: Project Development Branch July 4, 2012

STANDARD PLAN NO.

M-606-1

Sheet No. 10 of 20

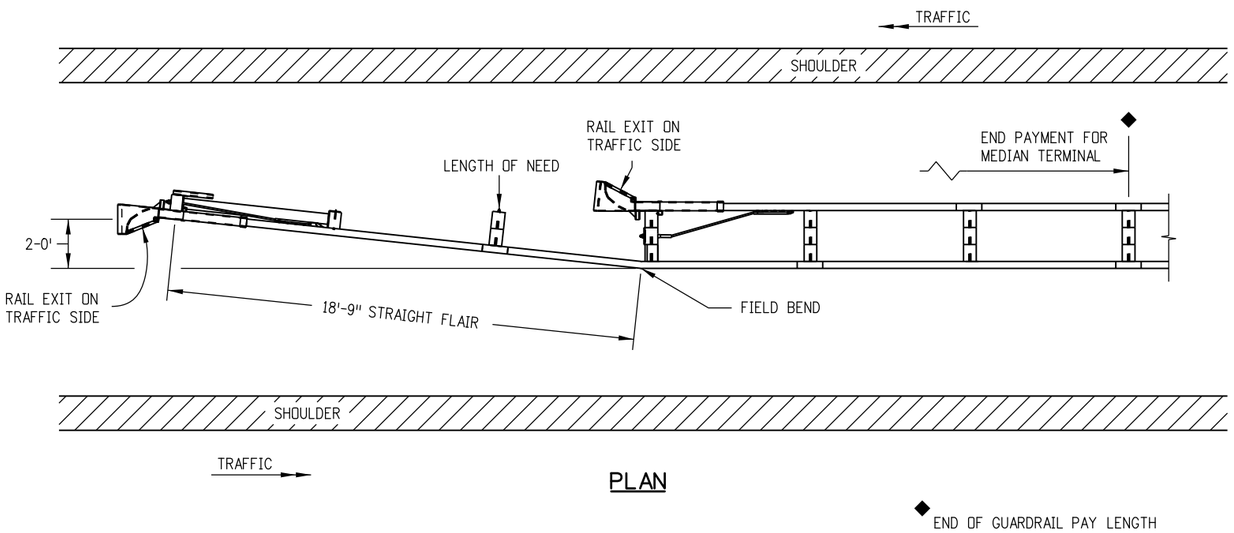

PLAN

END OF GUARDRAIL PAY LENGTH

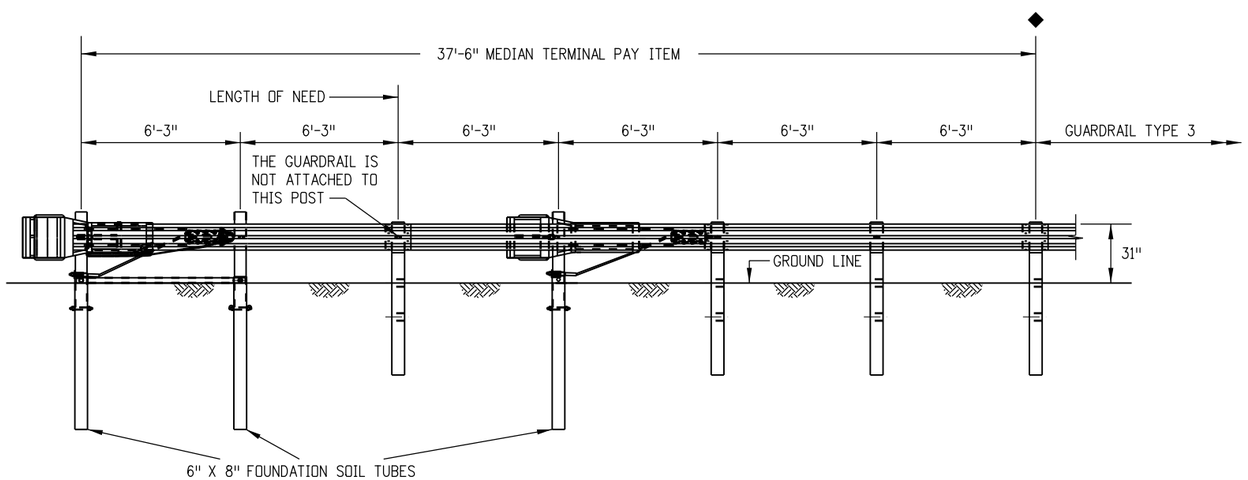

ELEVATION

MEDIAN TERMINAL

(FLEAT-MT OPTION)

FLEAT- MT NOTES

1. THE FLEAT-MT MAY BE SELECTED AS A MEDIAN TERMINAL UNLESS OTHERWISE SHOWN IN THE PLANS.
2. BREAKAWAY POSTS ARE REQUIRED WITH THE FLEAT-MT.
3. THE SOIL TUBES SHALL NOT PROTRUDE MORE THAN 4 INCHES ABOVE GROUND (MEASURED ALONG A 5 FEET CORD). SITE GRADING MAY BE NECESSARY TO MEET THIS REQUIREMENT.
4. THE SOIL TUBES SHALL BE DRIVEN WITH AN APPROVED DRIVING HEAD AND NOT BE DRIVEN WITH THE POST IN THE TUBE. IF THE TUBES ARE PLACED IN DRILLED HOLES, THE BACKFILL MATERIAL MUST BE SATISFACTORILY COMPACTED TO PREVENT SETTLEMENT.
5. WHEN ROCK IS ENCOUNTERED DURING EXCAVATION, A 12 INCH DIA. POST HOLE, 20 INCH DEEP MAY BE USED IF APPROVED BY THE ENGINEER. GRANULAR MATERIAL SHALL BE PLACED IN THE BOTTOM OF THE HOLE APPROX. 2½ INCH DEEP TO PROVIDE DRAINAGE. THE SOIL TUBES SHALL BE FIELD CUT TO LENGTH, PLACED IN THE HOLE AND BACKFILLED WITH ADEQUATELY COMPACTED MATERIAL EXCAVATED FROM THE HOLE.
6. THE BREAKAWAY CABLE ASSEMBLY MUST BE TAUT. DO NOT TWIST THE CABLE WHEN TIGHTENING NUTS.

Computer File Information			Sheet Revisions	
Creation Date: 08/19/15 Initials: DLM			Date:	Comments
Last Modification Date: 12/29/15 Initials: LTA	(R-X)		12/29/15	Raised guardrail height to 31".
Full Path: www.codot.gov/business/designsupport	(R-X)			
Drawing File Name: 60601011020.dgn	(R-X)			
CAD Ver.: MicroStation V8 Scale: Not to Scale Units: English	(R-X)			

Colorado Department of Transportation
4201 East Arkansas Avenue
CDOT HQ, 4th Floor
Denver, CO 80222
Phone: 303-757-9021 FAX: 303-757-9868
Division of Project Support DLM/LTA

MIDWEST
GUARDRAIL SYSTEM (MGS)
TYPE 3 W-BEAM 31 INCHES

Issued By: Project Development Branch July 4, 2012

STANDARD PLAN NO.
M-606-1
Sheet No. 11 of 20

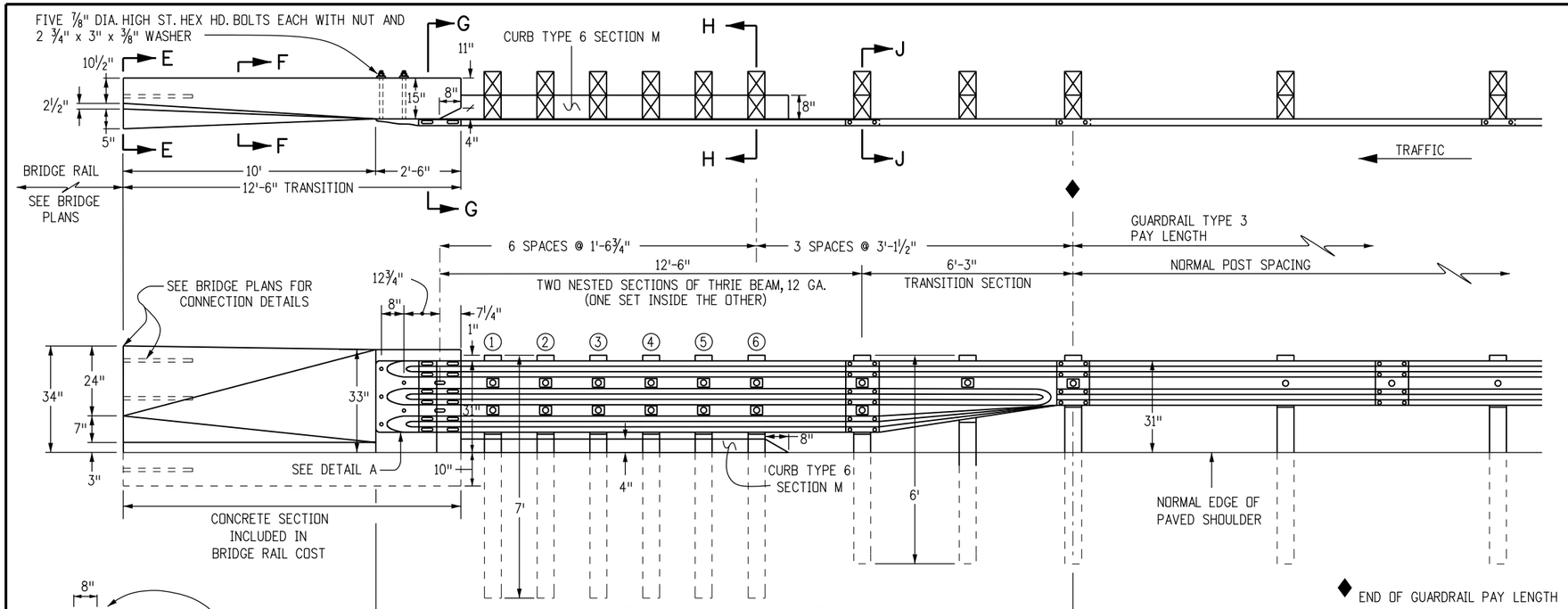

TRANSITION TYPE 3G

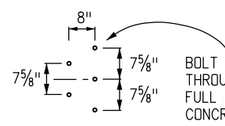

DETAIL A

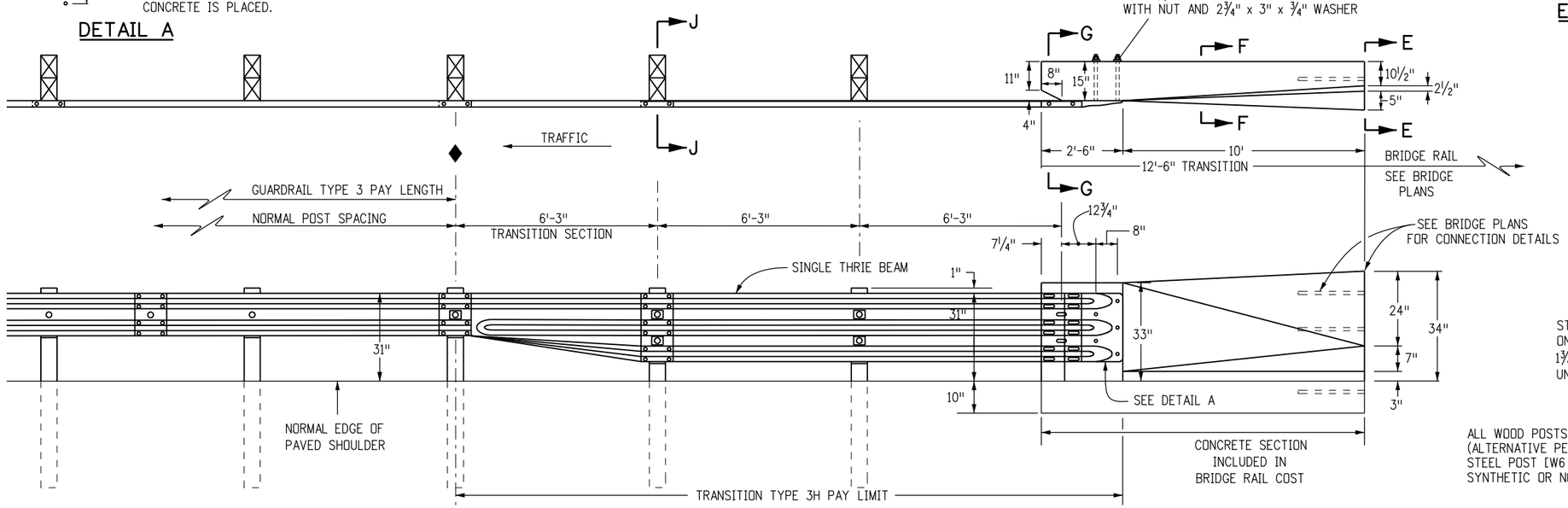

TRANSITION TYPE 3H

NOTES

1. TRANSITION TYPE 3G IS FOR USE AT BOTH ENDS OF BRIDGES ON TWO-WAY HIGHWAYS AND AT THE APPROACH END OF BRIDGES ON ONE-WAY HIGHWAYS.
2. TRANSITION TYPE 3H IS FOR USE AT THE TRAILING END OF BRIDGES ON ONE-WAY HIGHWAYS.
3. THE THRIE BEAM SECTION IN TRANSITIONS TYPES 3G AND 3H MAY BE SHOP BENT TO FIT CURVES THAT ARE GREATER THAN OR EQUAL TO A 10 FT. RADIUS. HOWEVER, THE 6 FT.-3 IN. TRANSITION SECTION SHALL NOT BE BENT.
4. A 12 FT.-6 IN. CONCRETE TRANSITION IS REQUIRED BETWEEN THE TYPE 3G OR 3H AND TYPE 7 BRIDGE RAIL. SEE STANDARD PLAN M-606-13 FOR THE TRANSITION BETWEEN TYPE 3 GUARDRAIL AND TYPE 7 GUARDRAIL.
5. TRANSITIONS TYPE 3G AND TYPE 3H ARE ALSO USED TO CONNECT TO TYPE 8 AND TYPE 10 BRIDGE RAIL. SEE BRIDGE PLANS FOR CONNECTION DETAILS.
6. BACKUP PLATE IS NOT REQUIRED AT POSTS ON TYPE 3G AND 3H.
7. ▣ THIS SYMBOL IN THE ELEVATION DRAWINGS SHOWS THE LOCATIONS WHERE A RECTANGULAR WASHER IS REQUIRED UNDER THE POST BOLT HEAD.
8. CURB TYPE 6 SECTION M, MAY BE ASPHALT OR CONCRETE. THE COST OF CURB IS INCLUDED IN THE WORK, UNLESS A SEPARATE PAY ITEM IS INCLUDED IN THE BID SCHEDULE.
9. POSTS ① THRU ⑥ ARE 7 FT. LONG. ALL OTHER POSTS SHALL BE STANDARD 6 FT. IN LENGTH UNLESS OTHERWISE SPECIFIED IN THE CONTRACT.
10. NOTCHED RAIL BLOCKS MANUFACTURED FROM SYNTHETIC MATERIAL WILL BE ACCEPTED AS ALTERNATIVES TO WOOD NOTCHED BLOCKS FOR USE WITH STEEL POSTS PROVIDED THAT THE BLOCKS HAVE RECEIVED FHWA APPROVAL AND ARE CERTIFIED AS IDENTICAL TO THE SPECIMENS USED FOR TESTING AND APPROVAL. STEEL BLOCKS ARE NOT ALLOWED.

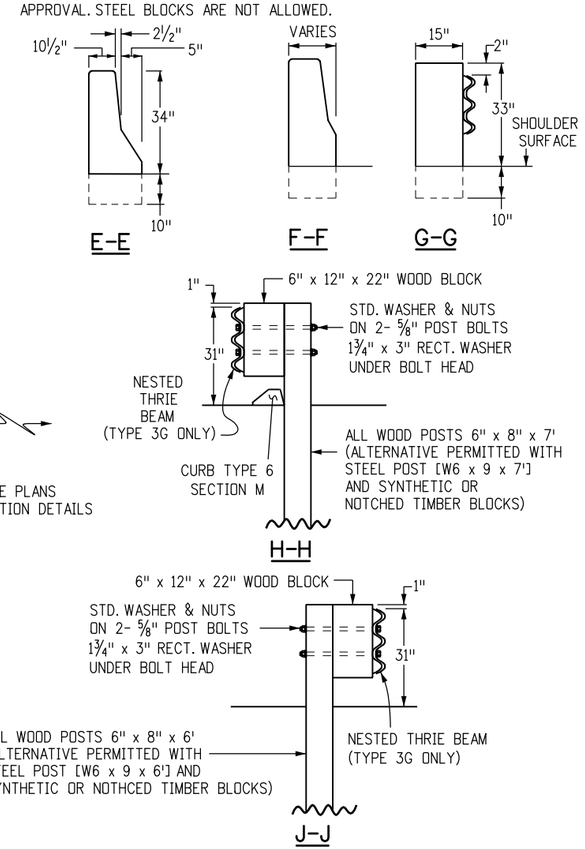

Computer File Information		Sheet Revisions	
Creation Date: 08/19/15 Initials: DLM		Date:	Comments
Last Modification Date: 12/29/15 Initials: LTA	R-X	12/29/15	Raised guardrail height to 31" and leveled the top of transisition guardrails.
Full Path: www.codot.gov/business/designsupport	R-X		
Drawing File Name: 60601012020.dgn	R-X		
CAD Ver.: MicroStation V8 Scale: Not to Scale Units: English	R-X		

Colorado Department of Transportation
4201 East Arkansas Avenue
CDOT HQ, 4th Floor
Denver, CO 80222
Phone: 303-757-9021 FAX: 303-757-9868
Division of Project Support DLM/LTA

MIDWEST GUARDRAIL SYSTEM (MGS) TYPE 3 W-BEAM 31 INCHES

Issued By: Project Development Branch July 4, 2012

STANDARD PLAN NO.

M-606-1

Sheet No. 12 of 20

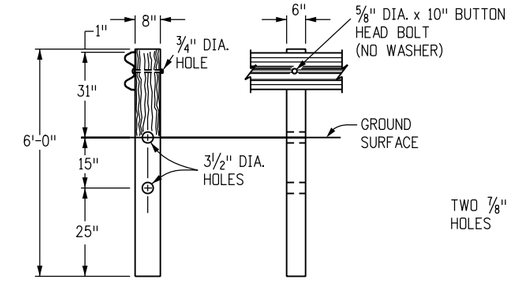

CONTROLLED RELEASING TERMINAL (CRT) POST ①

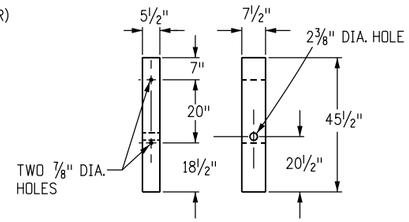

WOOD BREAKAWAY POST ②

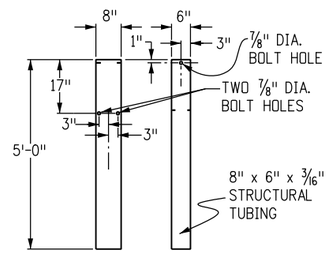

STEEL TUBE

POST	DIMENSIONS	TYPE
①	6" x 8" x 6'	CRT
②	5 1/2" x 7 1/2" x 45 1/2"	BREAKAWAY

POSTS

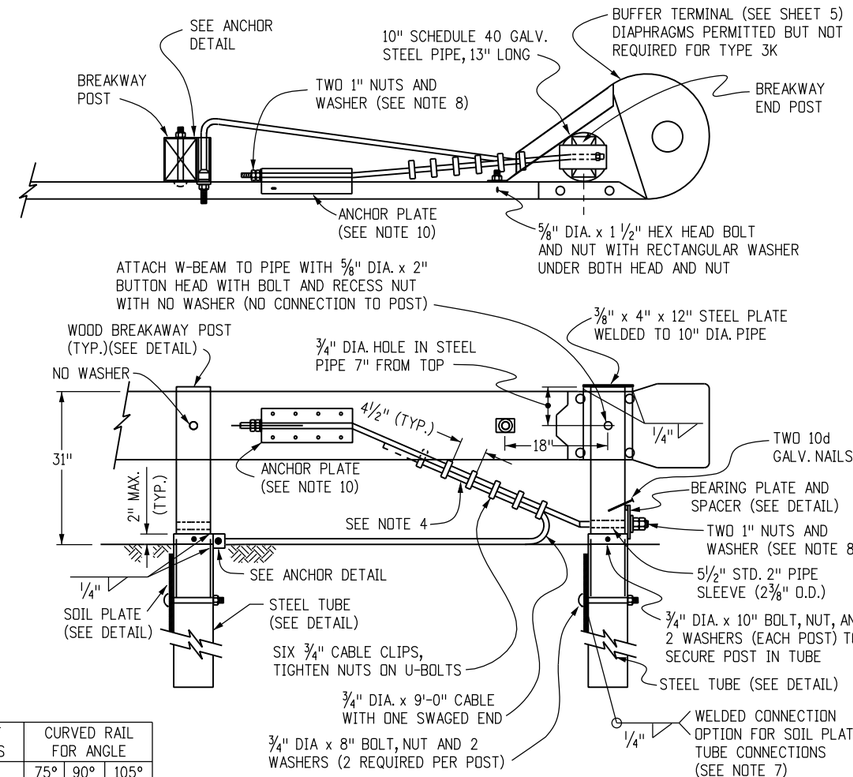

LOW SPEED TERMINAL - TYPE 3K

NOTES

1. APPLICATION: THE TRANSITION TYPE 3J MAY BE USED TO SHIELD HAZARDS AT THE INTERSECTION OF TWO ROADWAYS. TYPICAL APPLICATIONS INCLUDE, BUT ARE NOT LIMITED TO, THE FOLLOWING:
   A. CANAL SERVICE ROADS AT BRIDGE ENDS.
   B. INTERRUPTIONS IN GUARDRAIL RUNS BY INTERSECTING ROADWAYS, ETC..

   THE LOW SPEED (<45 MPH) END ANCHORAGE TYPE 3K SHALL BE USED ONLY ON DRIVEWAYS AND LOW SPEED SERVICE ROADS. WHEN AN APPROVED CRASH-TESTED END TREATMENT IS REQUIRED USE THE END ANCHORAGE (FLARED) OR (NONFLARED) WITH 37 FT.-6 IN. LENGTH.
2. GRADING AND PAVING FOR THE 3J & 3K SHALL MATCH THE GRADING AND PAVING OF THE GUARDRAIL TO WHICH THEY ARE ATTACHED, AND SHALL BE IN ACCORDANCE WITH SHEET ONE OF THIS STANDARD. MAXIMUM FILL SLOPE SHALL BE 2:1.
3. THE RAIL IS NOT BOLTED TO THE CRT POST AT THE CENTER OF THE CURVE FOR THE 8 FT.-6 IN., 17 FT., AND 25 FT.-6 IN. RADII. PLATES SHALL CONFORM TO ASTM A 36, AND THE STRUCTURAL TUBING TO ASTM A 500.
4. THE 3/4IN. GALVANIZED WIRE ROPE (CABLE) SHALL CONFORM TO AASHTO M 30 TYPE II.
5. PLATES SHALL CONFORM TO ASTM A 36, AND STRUCTURAL TUBING TO ASTM A 500. WELDING SHALL MEET ALL REQUIREMENTS OF THE AMERICAN WELDING SOCIETY.
6. ALL STRUCTURAL STEEL SHALL BE GALVANIZED IN CONFORMANCE WITH ASTM A 123. POSTS SHALL NOT BE PUNCHED, DRILLED, CUT, OR WELDED AFTER GALVANIZING.
7. WHEN THE SOIL PLATE WELDED OPTION IS SELECTED, SOIL PLATE CONNECTION BOLT HOLES ARE NOT REQUIRED.
8. OUTSIDE NUT SHALL BE TORQUED AGAINST INSIDE NUT WITH THE CABLE INSTALLED TAUT BETWEEN THE ANCHOR PLATE AND FIRST POST.
9. ALL CURVED GUARDRAIL SHALL BE SHOP BENT.
10. SEE SHEET 4 FOR ANCHOR PLATE AND OTHER DETAILS.
11. THE STEEL TUBE MAY BE DRIVEN WITH WOOD POST INSERTED IF NO DAMAGE OCCURS TO THE POST OR BOLTS.

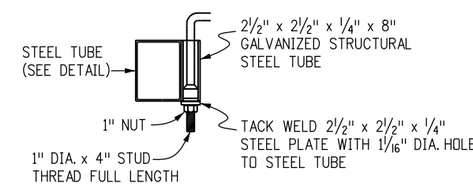

ANCHOR DETAIL

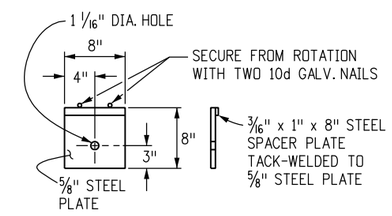

BEARING PLATE FOR STEEL TUBE

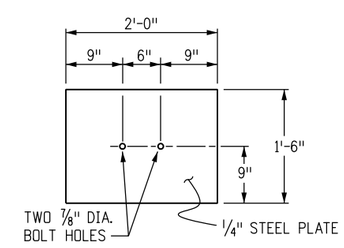

SOIL PLATE

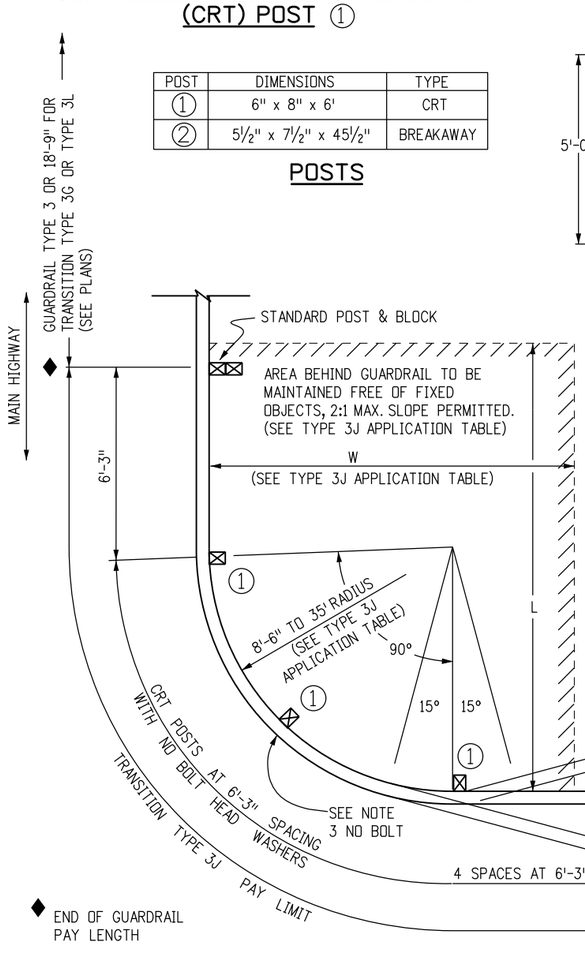

RADIUS	ANGLE	NO. CRT POSTS	AREA FREE OF FIXED OBJECTS		CURVED RAIL FOR ANGLE		
			L	W	75°	90°	105°
8'-6"	75°-105°	5	25'	15'	11'	13'	15'
17'	75°-90°	6	30'	15'	22"	27'	31'
	91°-105°	7					
25'-6"	75°-85°	7	40'	20'	33'	40'	47'
	86°-95°	8					
	96°-105°	9					
35'	75°-85°	9	50'	20'	46'	55'	64'
	86°-95°	10					
	96°-105°	11					

TRANSITION TYPE 3J APPLICATION

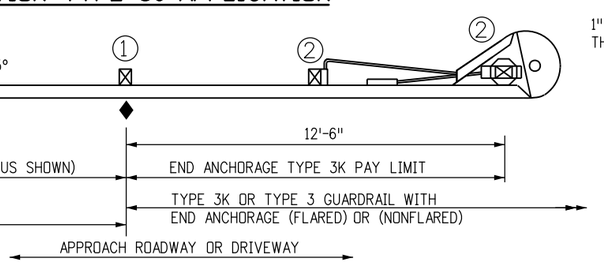

INTERSECTING ROADWAYS TRANSITION - TYPE 3J TRANSITION

Computer File Information	
Creation Date: 08/19/15	Initials: DLM
Last Modification Date: 12/29/15	Initials: LTA
Full Path: www.codot.gov/business/designsupport	
Drawing File Name: 60601013020.dgn	
CAD Ver.: MicroStation V8 Scale: Not to Scale Units: English	

	Sheet Revisions	
	Date:	Comments
R-X	12/29/15	Raised guardrail height to 31".
R-X		
R-X		
R-X		

Colorado Department of Transportation
4201 East Arkansas Avenue
CDOT HQ, 4th Floor
Denver, CO 80222
Phone: 303-757-9021 FAX: 303-757-9868
Division of Project Support DLM/LTA

MIDWEST GUARDRAIL SYSTEM (MGS) TYPE 3 W-BEAM 31 INCHES

Issued By: Project Development Branch July 4, 2012

STANDARD PLAN NO.

M-606-1

Sheet No. 13 of 20

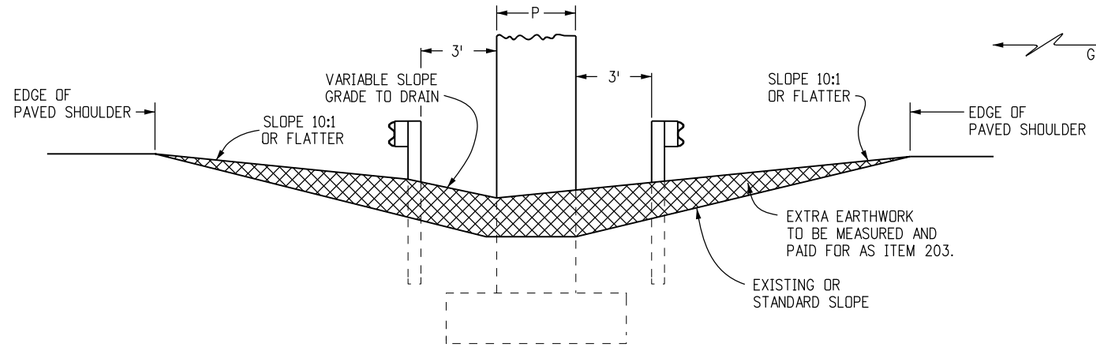

SECTION J-J

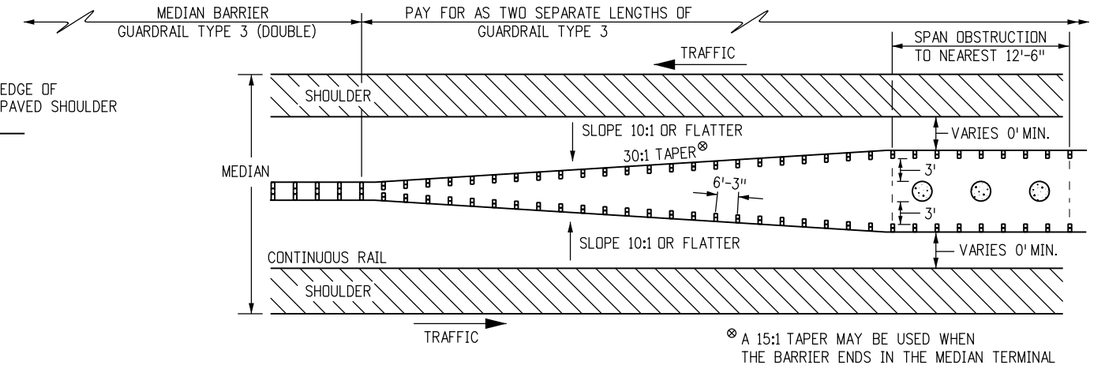

⊗ A 15:1 TAPER MAY BE USED WHEN THE BARRIER ENDS IN THE MEDIAN TERMINAL

OBSTRUCTION IN MEDIAN 30 FT. WIDE OR LESS

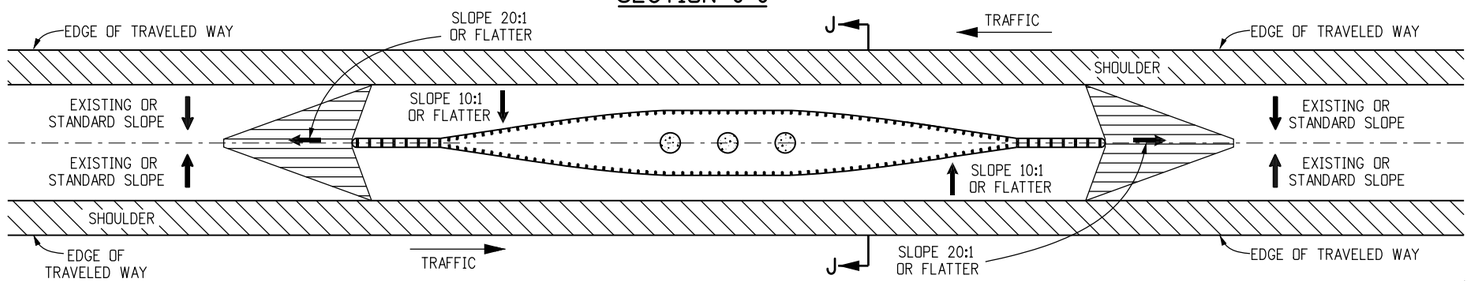

GRADING FOR MEDIAN OBSTRUCTION

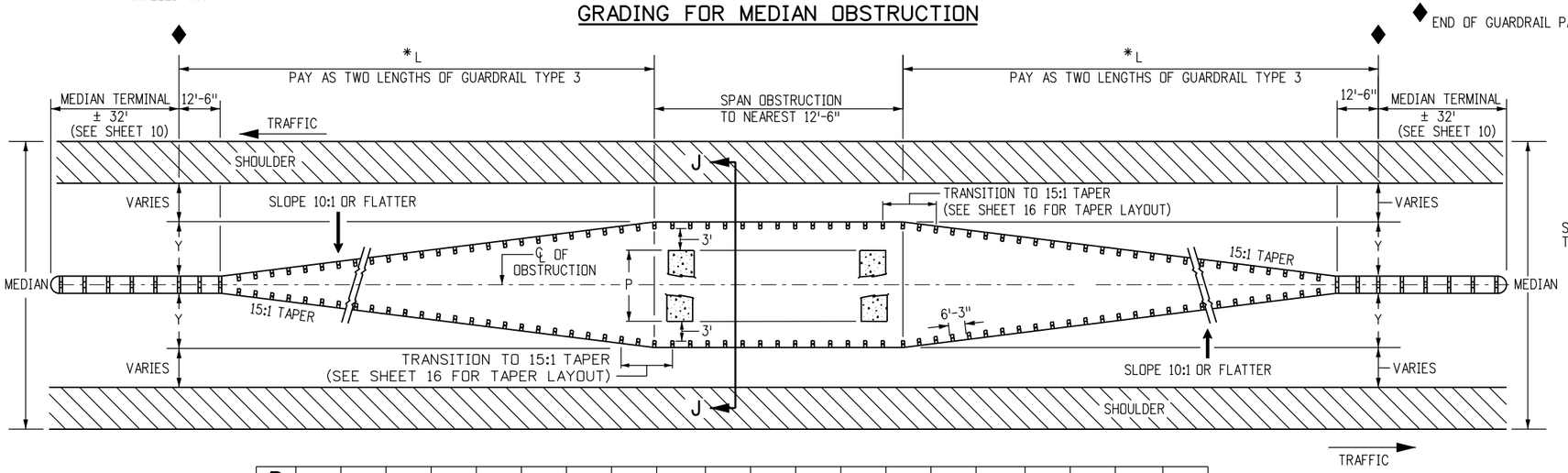

P	1'	2'	3'	4'	5'	6'	7'	8'	9'	10'	11'	12'	13'	14'	15'	16'	17'	18'	19'	20'
Y	4'-1"	4'-7"	5'-1"	5'-7"	6'-1"	6'-7"	7'-1"	7'-7"	8'-1"	8'-7"	9'-1"	9'-7"	10'-1"	10'-7"	11'-1"	11'-7"	12'-1"	12'-7"	13'-1"	13'-7"
L	75'	87'-6"		100'	112'-6"		125'		137'-6"	150'		162'-6"		175'		187'-6"	200'		212'-6"	225'

*L IS MEASURED ALONG FACE OF GUARDRAIL

GUARDRAIL FOR OBSTRUCTION IN MEDIANS WIDER THAN 30 FT.

NOTE: FOR OBSTRUCTIONS (P) THAT ARE WIDER THAN 20 FT. IN MEDIANS USE SHEET 17.

D	F
1'	10'
2'	18'
3'	28'
4'	38'
5'	48'

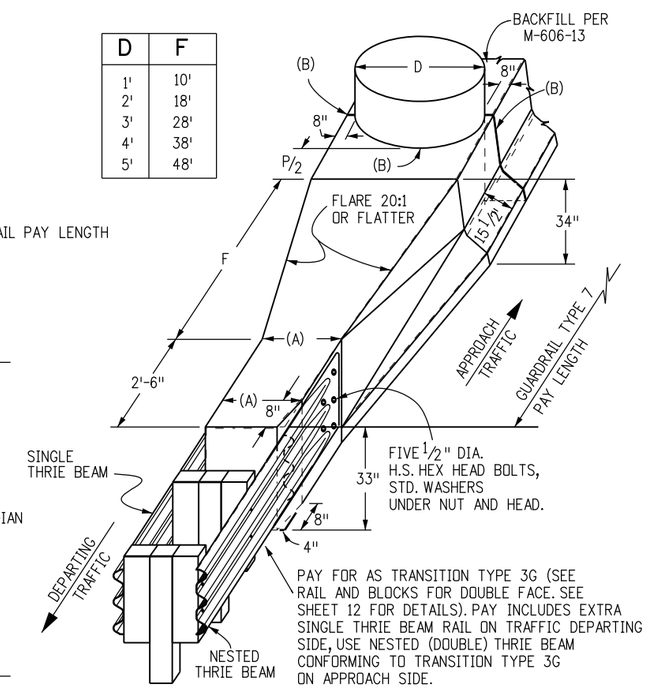

(A). TIMBER POSTS 2 FT., STEEL POSTS 1 FT.-9½IN.

(B). ½ IN. PREFORMED JOINT MATERIAL

NARROW MEDIAN DETAIL

USUALLY LESS THAN 30 FT. WIDE MEDIAN WITH ALL PAVED SURFACE

OBSTRUCTIONS IN MEDIANS

Computer File Information		
Creation Date: 08/19/15	Initials: DLM	
Last Modification Date: 12/29/15	Initials: LTA	(R-X)
Full Path: www.codot.gov/business/designsupport		(R-X)
Drawing File Name: 60601014020.dgn		(R-X)
CAD Ver.: MicroStation V8 Scale: Not to Scale Units: English		(R-X)

Sheet Revisions	
Date:	Comments

Colorado Department of Transportation
4201 East Arkansas Avenue
CDOT HQ, 4th Floor
Denver, CO 80222
Phone: 303-757-9021 FAX: 303-757-9868
Division of Project Support DLM/LTA

MIDWEST GUARDRAIL SYSTEM (MGS) TYPE 3 W-BEAM 31 INCHES

Issued By: Project Development Branch July 4, 2012

STANDARD PLAN NO.

M-606-1

Sheet No. 14 of 20

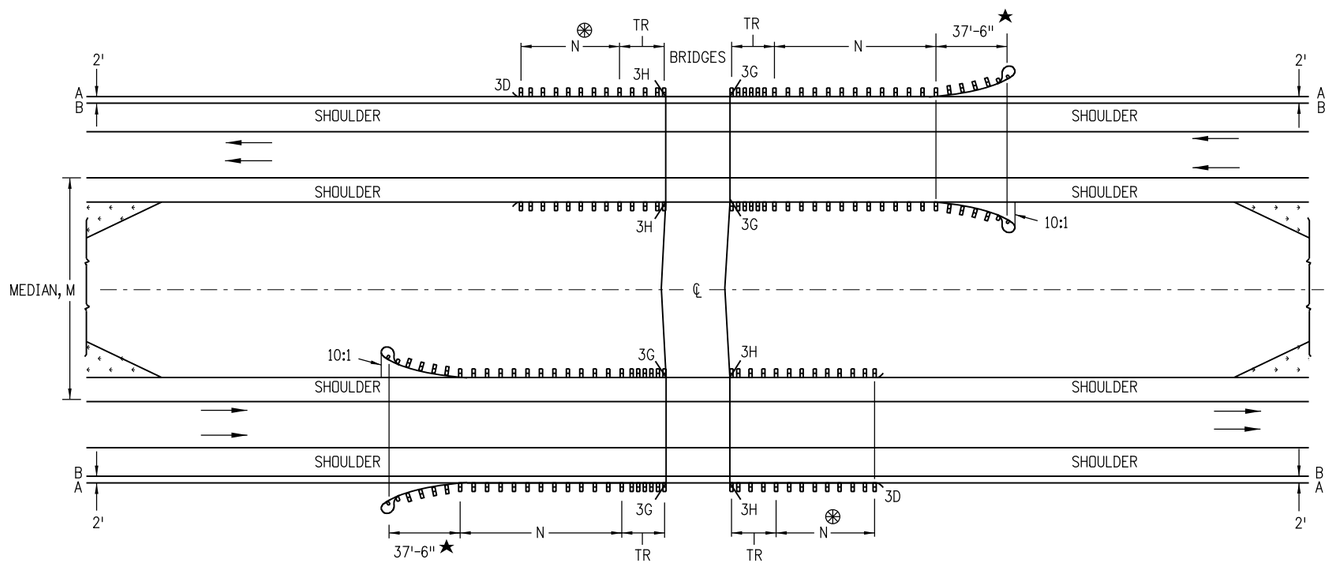

MULTILANE DIVIDED HIGHWAYS FOR STEEP EMBANKMENTS IN MEDIAN

NOTES

1. MEDIAN BARRIERS TANGENT TO THE ROADWAY MAY BE USED WHERE THE SHOULDER SLOPES IN THE MEDIAN ARE STEEP.
2. BARRIER LENGTHS SHALL BE INCREASED TO ACCOUNT FOR STEEP EMBANKMENTS OR OTHER HAZARDS WITHIN CLOSE PROXIMITY OF BRIDGES.

⊛ — DO NOT CONSTRUCT THE TR AND GUARDRAIL ON THE TRAILING BRIDGE ENDS IF SITE CONDITIONS DO NOT WARRANT THE USE OF GUARDRAIL.

N — SHOWN ON PLANS. LENGTH TO SHIELD ALL HAZARDS IS BASED ON GUARDRAIL'S LENGTH OF NEED COMPUTATION. SEE AASHTO ROADWAY DESIGN GUIDE. THE MINIMUM SHALL BE 12 FT. - 6 IN., WHERE SITE CONDITIONS ALLOW. THE TOTAL LENGTH OF NEED WILL INCLUDE THE LENGTH OF TRANSITION, THE LENGTH OF RAIL (N), AND ANY REDIRECTIVE LENGTH IN THE RAIL END TREATMENT.

TR — 18 FT.-9 IN. FOR 3G AND 3H.

A — EDGE OF 8 FT. OR 10 FT. SHOULDER.

B — EDGE OF 6 FT. OR LESS SHOULDER.

★ — END ANCHORAGE CAN BE FLARED OR NONFLARED.

Computer File Information		
Creation Date: 08/19/15	Initials: DLM	
Last Modification Date: 12/29/15	Initials: LTA	(R-X)
Full Path: www.codot.gov/business/designsupport		(R-X)
Drawing File Name: 60601015020.dgn		(R-X)
CAD Ver.: MicroStation V8 Scale: Not to Scale Units: English		(R-X)

Sheet Revisions	
Date:	Comments

Colorado Department of Transportation
4201 East Arkansas Avenue
CDOT HQ, 4th Floor
Denver, CO 80222
Phone: 303-757-9021 FAX: 303-757-9868
Division of Project Support DLM/LTA

MIDWEST
GUARDRAIL SYSTEM (MGS)
TYPE 3 W-BEAM 31 INCHES

Issued By: Project Development Branch July 4, 2012

STANDARD PLAN NO.
M-606-1
Sheet No. 15 of 20

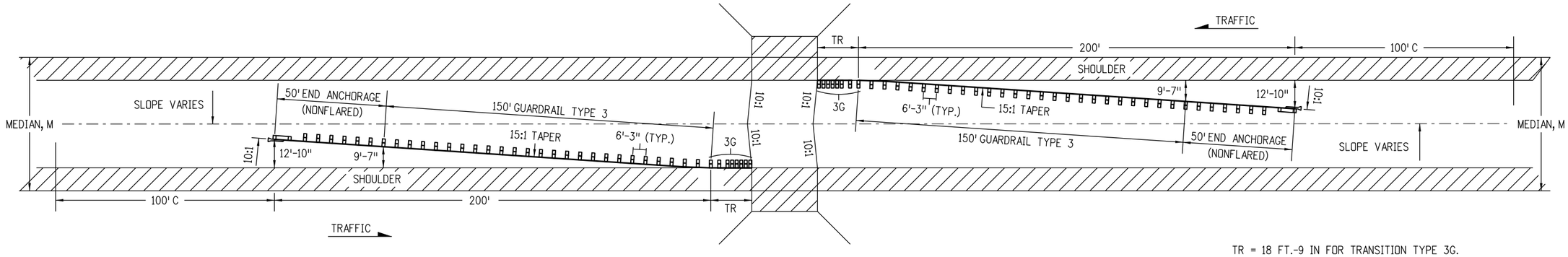

TR = 18 FT.-9 IN FOR TRANSITION TYPE 3G.
C = CHANGE: 100 FT. TRANSITION TO NORMAL SLOPE.
M = WIDTH OF MEDIAN.

MEDIANS 60 FT. AND OVER WITH 10 FT. OR WIDER SHOULDERS.

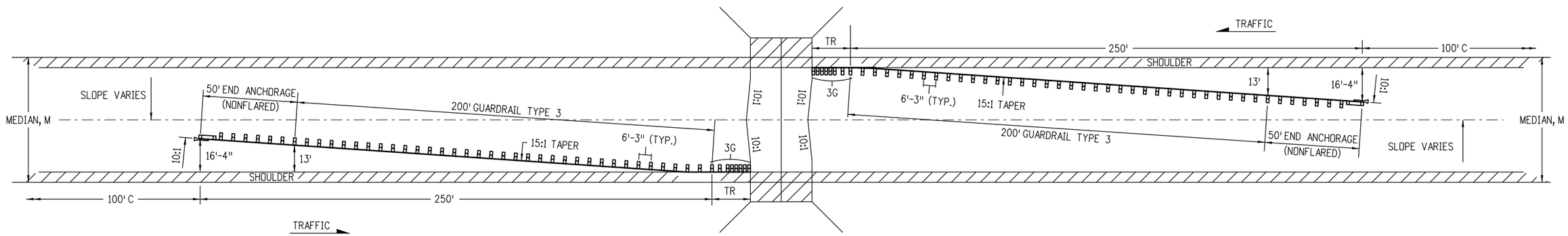

MEDIANS 60 FT. AND OVER WITH 4 to 8 FT. SHOULDERS.

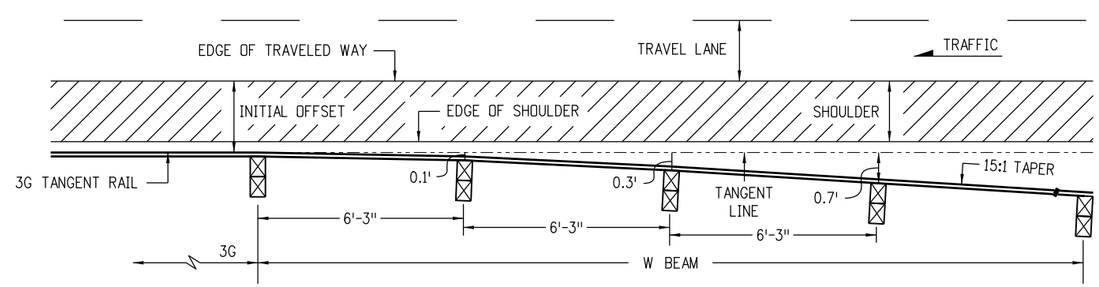

TRANSITION TO TYPICAL 15:1 TAPER

NOTES

1. GUARDRAIL TRANSITIONS FROM PARALLEL TO ROADWAY SHOULDER AT 3G SEGMENT TO 15:1 TAPER WITHIN 18'-9" BASED ON POST OFFSET DIMENSIONS SHOWN.
2. SEE SHEET 15 FOR THE RIGHT SHOULDER GUARDRAIL LAYOUT.

MULTILANE DIVIDED HIGHWAYS - (DEPRESSED MEDIANS, 60 FT. AND OVER WITH OPEN HAZARDS OR OBSTRUCTIONS)

Computer File Information		Sheet Revisions	
Creation Date: 08/19/15 Initials: DLM		Date:	Comments
Last Modification Date: 12/29/15 Initials: LTA	(R-X)		
Full Path: www.codot.gov/business/designsupport	(R-X)		
Drawing File Name: 60601016020.dgn	(R-X)		
CAD Ver.: MicroStation V8 Scale: Not to Scale Units: English	(R-X)		

Colorado Department of Transportation
4201 East Arkansas Avenue
CDOT HQ, 4th Floor
Denver, CO 80222
Phone: 303-757-9021 FAX: 303-757-9868
Division of Project Support DLM/LTA

MIDWEST
GUARDRAIL SYSTEM (MGS)
TYPE 3 W-BEAM 31 INCHES

Issued By: Project Development Branch July 4, 2012

STANDARD PLAN NO.
M-606-1
Sheet No. 16 of 20

NOTES

1. GUARDRAIL TRANSITIONS FROM PARALLEL TO ROADWAY SHOULDER AT 3G SEGMENT TO 15:1 TAPER WITHIN 18'-9" BASED ON POST OFFSET DIMENSIONS SHOWN.
2. THE OPTION 1 LAYOUT SHALL BE USED WHEN "Y" EXCEEDS 16 FEET OR WHEN MEDIAN BARRIER IS CONTINUOUS.
3. THE OPTION 2 LAYOUT SHALL BE USED WHEN "Y" IS 16 FEET OR LESS.
4. SEE SHEET 15 FOR RIGHT SHOULDER GUARDRAIL LAYOUT.

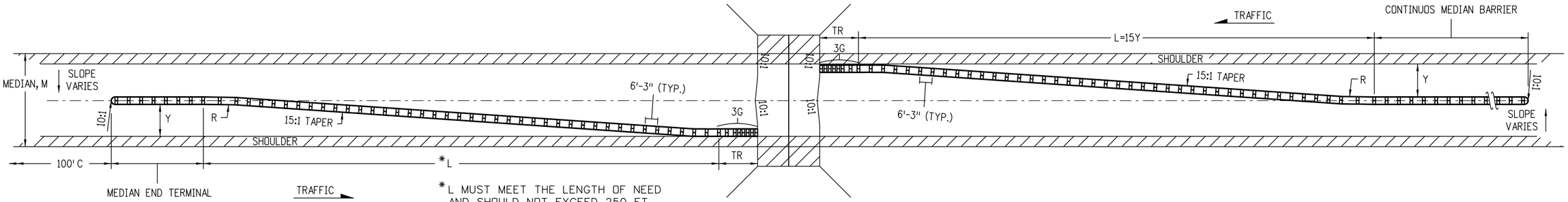

*L MUST MEET THE LENGTH OF NEED AND SHOULD NOT EXCEED 250 FT. UNLESS SITE CONDITIONS WARRENT.

(OPTION 1)

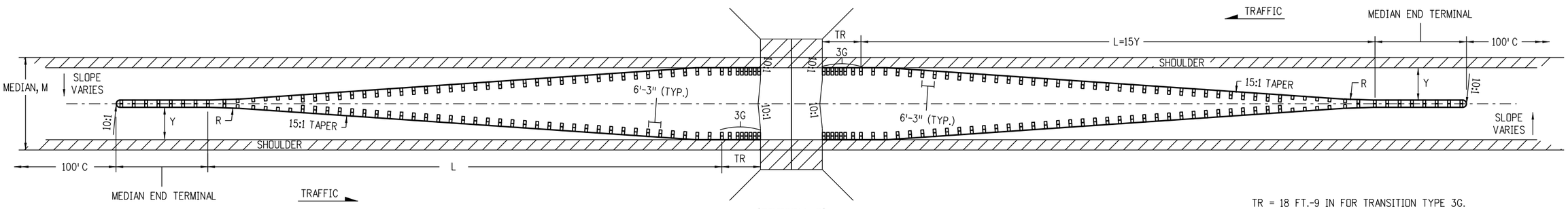

(OPTION 2)

TR = 18 FT.-9 IN FOR TRANSITION TYPE 3G.
C = CHANGE: 100 FT. TRANSITION TO NORMAL SLOPE.
M = WIDTH OF MEDIAN.
L = TOTAL LENGTH PAID AS GUARDRAIL TYPE 3.
Y = FINAL OFFSET AT END.

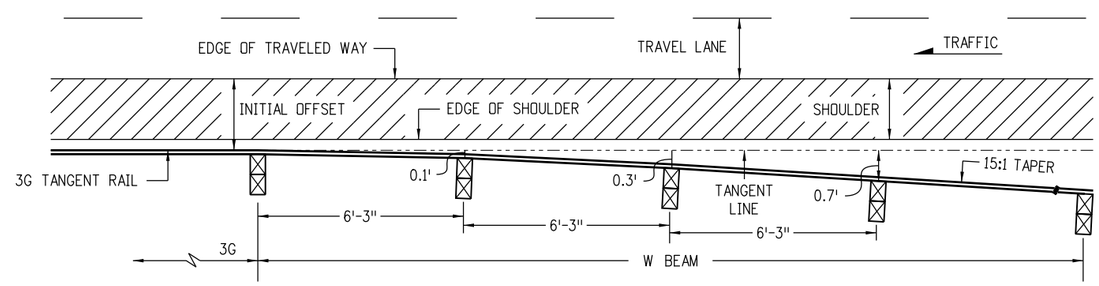

TRANSITION TO TYPICAL 15:1 TAPER

MULTILANE DIVIDED HIGHWAYS - (DEPRESSED MEDIANS, 21 - 59 FT. WITH OPEN HAZARDS OR OBSTRUCTIONS)

Computer File Information		Sheet Revisions	
Creation Date: 08/19/15 Initials: DLM		Date:	Comments
Last Modification Date: 12/29/15 Initials: LTA	(R-X)		
Full Path: www.codot.gov/business/designsupport	(R-X)		
Drawing File Name: 60601017020.dgn	(R-X)		
CAD Ver.: MicroStation V8 Scale: Not to Scale Units: English	(R-X)		

Colorado Department of Transportation
4201 East Arkansas Avenue
CDOT HQ, 4th Floor
Denver, CO 80222
Phone: 303-757-9021 FAX: 303-757-9868
Division of Project Support DLM/LTA

MIDWEST GUARDRAIL SYSTEM (MGS) TYPE 3 W-BEAM 31 INCHES

Issued By: Project Development Branch July 4, 2012

STANDARD PLAN NO.
M-606-1
Sheet No. 17 of 20

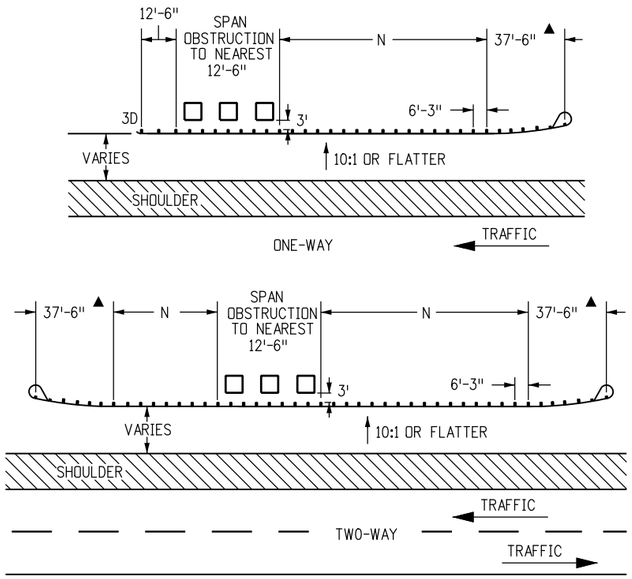

GUARDRAIL FOR ROADSIDE OBSTRUCTIONS

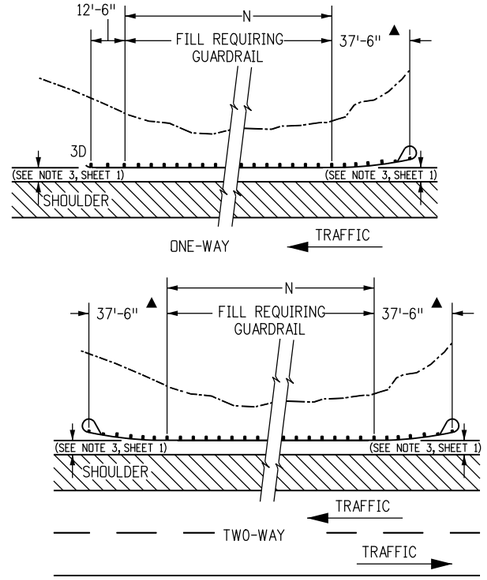

GUARDRAIL FOR ROADSIDE FILL CONSTRUCTION

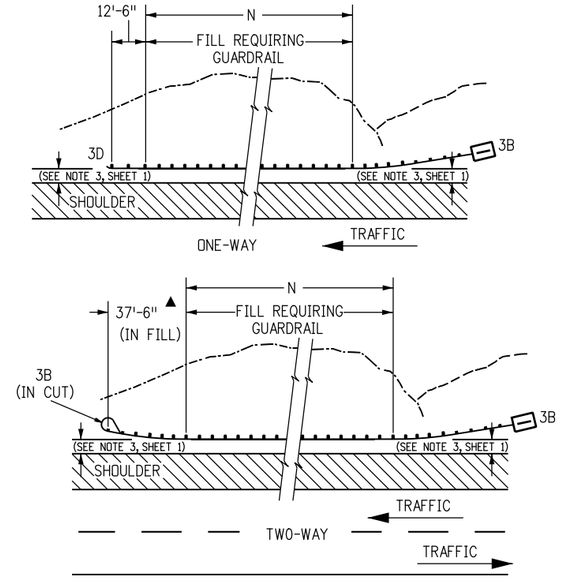

GUARDRAIL FOR ROADSIDE CUT-TO-FILL CONDITION

NOTES

1. THE TYPE 3G OR 3H TRANSITIONS (SEE SHEET 12) SHALL BE USED TO CONNECT A TYPE 3 W-BEAM TO TYPE 7 CONCRETE BARRIER OR TO A TYPE 7, 8, OR 10 BRIDGE RAIL. FOR A TRANSITION FROM A ROADWAY TYPE 3 W-BEAM TO A BRIDGE RAIL TYPE 3 WITH BACKING TUBES, THE TRANSITION TYPE 3L SHOWN ON SHEET 20 SHALL BE USED.
2. "TR" WILL BE 18 FT.-9 IN. FOR THE TRANSITIONS TYPE 3G AND 3H, AND 25 FT. FOR THE TRANSITION TYPE 3L.
3. THE GUARDRAIL LENGTH DIMENSION "N" IS THE LENGTH AS DETERMINED BY THE LENGTH OF NEED COMPUTATION AND IS SHOWN ON THE PLANS. THE MINIMUM IS 12 FT.-6 IN. WHERE SITE CONDITIONS ALLOW. THE OVERALL REQUIRED LENGTH OF NEED CAN INCLUDE THE LENGTH OF TRANSITION, THE LENGTH OF RAIL (N), AND ANY REDIRECTIVE LENGTH IN THE RAIL END TREATMENT. A TRAVERSABLE SLOPE SHALL BE PROVIDED BEHIND THE TERMINAL TO DIMENSION "N" PRIOR TO THE OBSTRUCTION UNLESS OTHERWISE APPROVED BY THE ENGINEER.

▲ END ANCHORAGE CAN BE FLARED OR NONFLARED

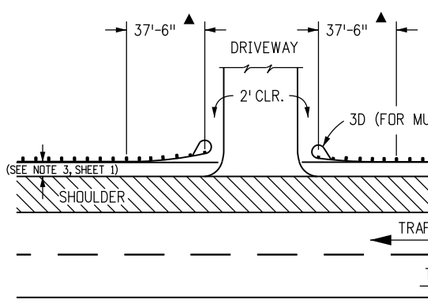

LAYOUT FOR DRIVEWAY APPROACH

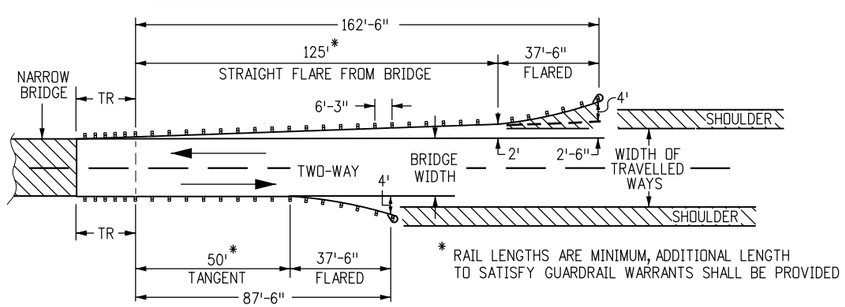

* RAIL LENGTHS ARE MINIMUM, ADDITIONAL LENGTH TO SATISFY GUARDRAIL WARRANTS SHALL BE PROVIDED

2-WAY NARROW APPLICATION

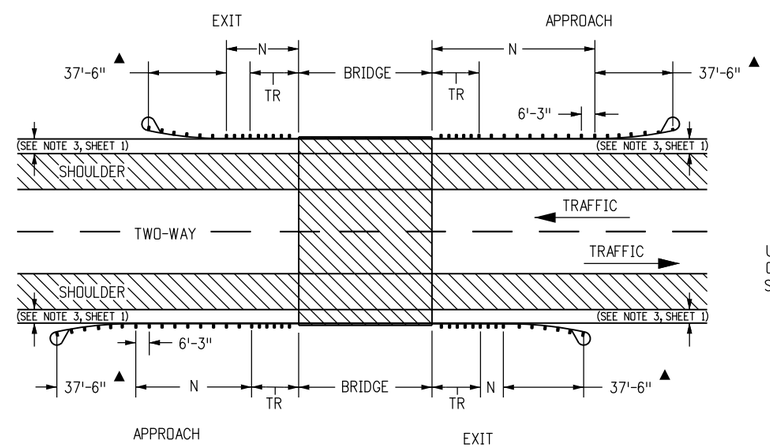

2-WAY NORMAL BRIDGE APPLICATION

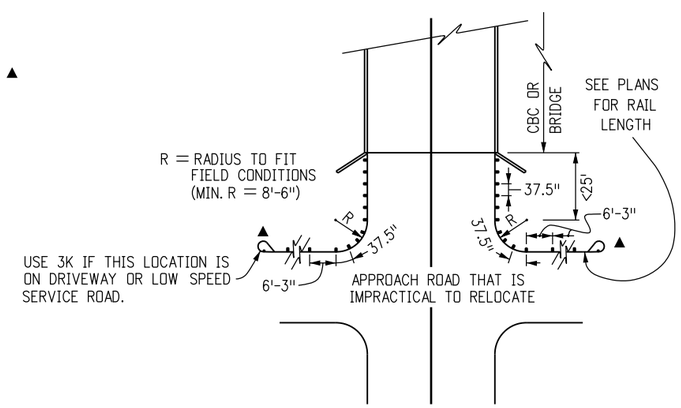

GUARDRAIL TYPE 3 WITH BLOCKED OUT POSTS SPACED AT 3'-1½" FROM STRUCTURE AROUND CURVE.

INTERRUPTED STRUCTURE APPROACH

(USE TYPE 3J ON SHEET 13 WHEN PRACTICAL)

Computer File Information		Sheet Revisions	
Creation Date: 08/19/15 Initials: DLM		Date:	Comments
Last Modification Date: 12/29/15 Initials: LTA	(R-X)		
Full Path: www.codot.gov/business/designsupport	(R-X)		
Drawing File Name: 60601018020.dgn	(R-X)		
CAD Ver.: MicroStation V8 Scale: Not to Scale Units: English	(R-X)		

Colorado Department of Transportation
4201 East Arkansas Avenue
CDOT HQ, 4th Floor
Denver, CO 80222
Phone: 303-757-9021 FAX: 303-757-9868
Division of Project Support DLM/LTA

MIDWEST GUARDRAIL SYSTEM (MGS) TYPE 3 W-BEAM 31 INCHES

Issued By: Project Development Branch July 4, 2012

STANDARD PLAN NO.

M-606-1

Sheet No. 18 of 20

NOTES

1. POSTS 1, 2, 9, and 10 MAY BE TIMBER OR STEEL.
2. THE NUMBER OF OMITTED POSTS IS DEPENDENT ON THE LENGTH OF THE GAP.

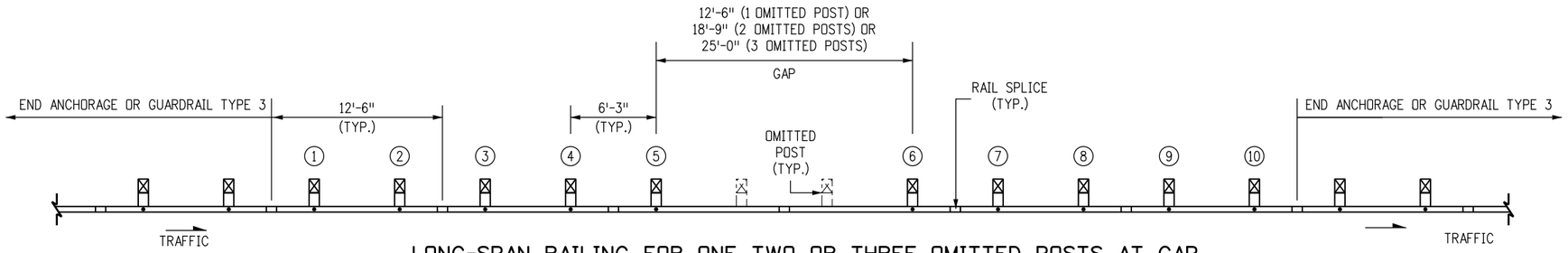

LONG-SPAN RAILING FOR ONE, TWO, OR THREE OMITTED POSTS AT GAP

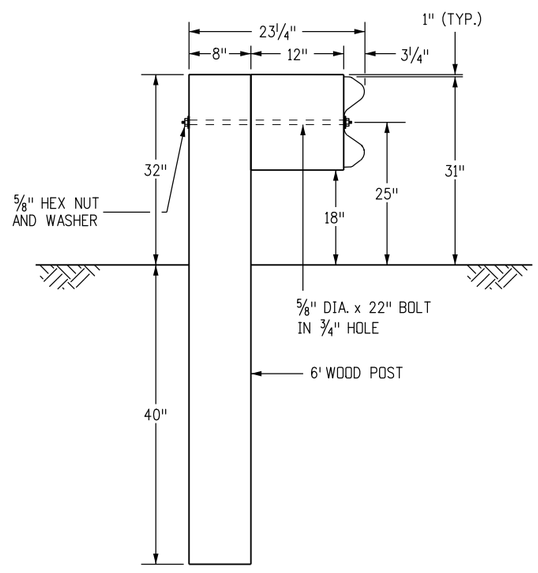

TIMBER POST

POSTS 1-2 AND 9-10
(SEE NOTE 1)

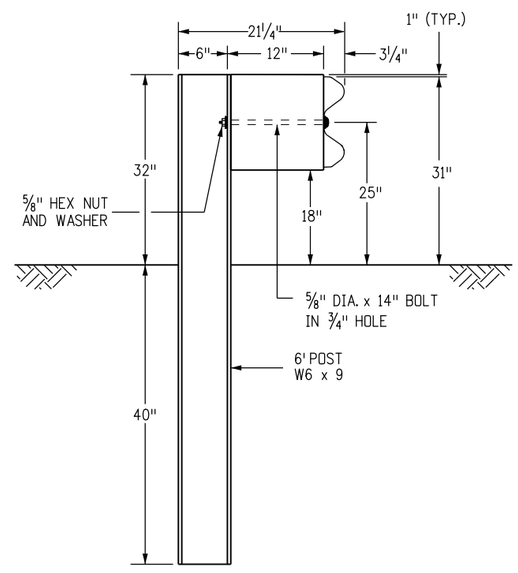

STEEL POST

POSTS 1-2 AND 9-10
(SEE NOTE 1)

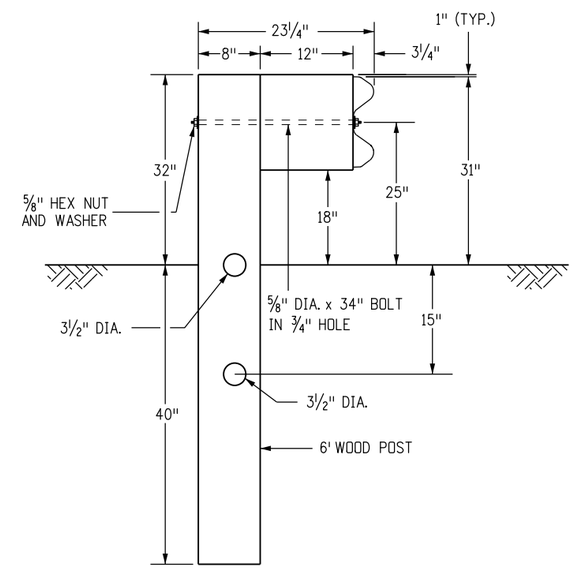

BREAKWAY TIMBER POST

POSTS 3 - 8

Computer File Information	
Creation Date: 08/19/15 Initials: DLM	
Last Modification Date: 12/29/15 Initials: LTA	R-X
Full Path: www.codot.gov/business/designsupport	R-X
Drawing File Name: 60601019020.dgn	R-X
CAD Ver.: MicroStation V8 Scale: Not to Scale Units: English	R-X

Sheet Revisions	
Date:	Comments
12/29/15	Raised guardrail height to 31".
12/29/15	Deleted Nested Rails details. Revised General Notes. Combined 1, 2, and 3 omitted posts details into one detail.

Colorado Department of Transportation
4201 East Arkansas Avenue
CDOT HQ, 4th Floor
Denver, CO 80222
Phone: 303-757-9021 FAX: 303-757-9868
Division of Project Support DLM/LTA

MIDWEST
GUARDRAIL SYSTEM (MGS)
TYPE 3 W-BEAM 31 INCHES

Issued By: Project Development Branch July 4, 2012

STANDARD PLAN NO.
M-606-1
Sheet No. 19 of 20

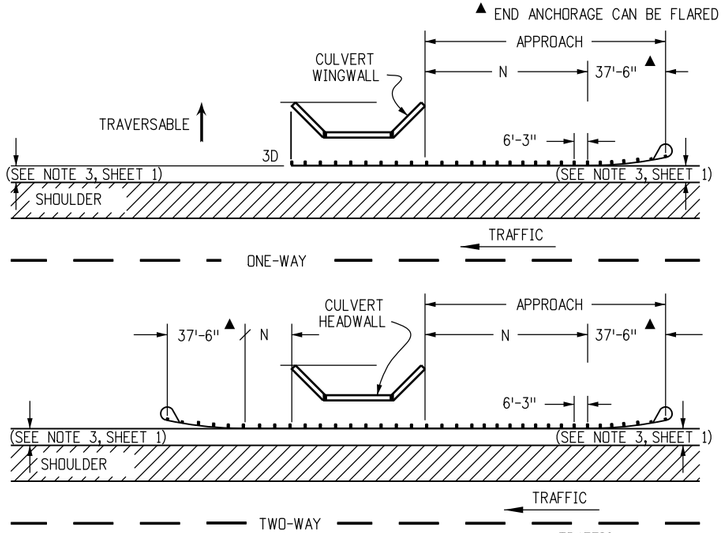

GUARDRAIL FOR CULVERTS

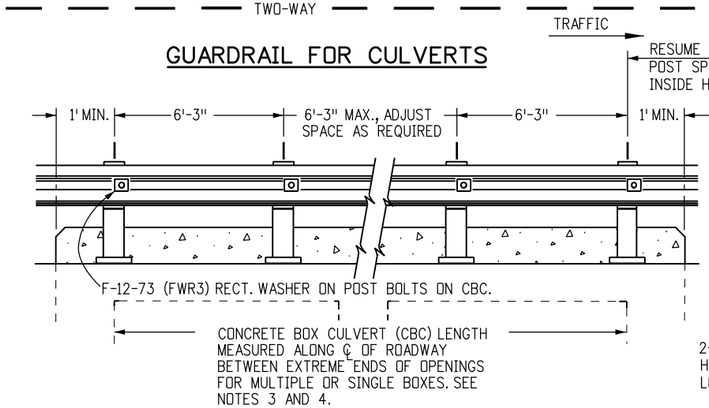

RAIL PLACEMENT FOR INSIDE OR HEADWALL MOUNT

* USE 3L TRANSITION AT BOTH APPROACH AND EXIT ENDS OF BRIDGE RAIL TYPE 3 (HEADWALL MOUNT)

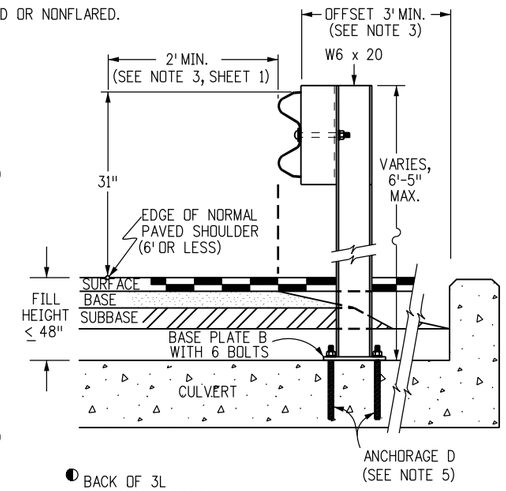

INSIDE MOUNT ON CBC

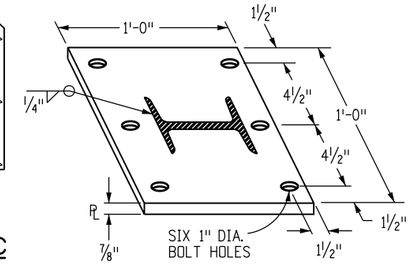

BASE PLATE B

(FOR INSIDE MOUNT)

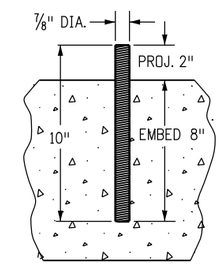

ANCHORAGE D

(FOR INSIDE MOUNT)

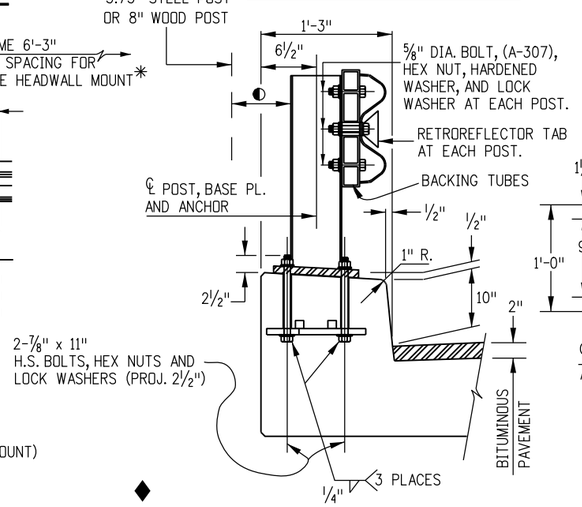

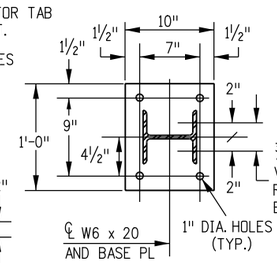

PLAN

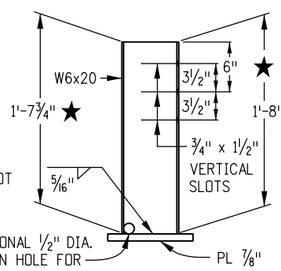

ELEVATION

HEADWALL MOUNT POST DETAIL

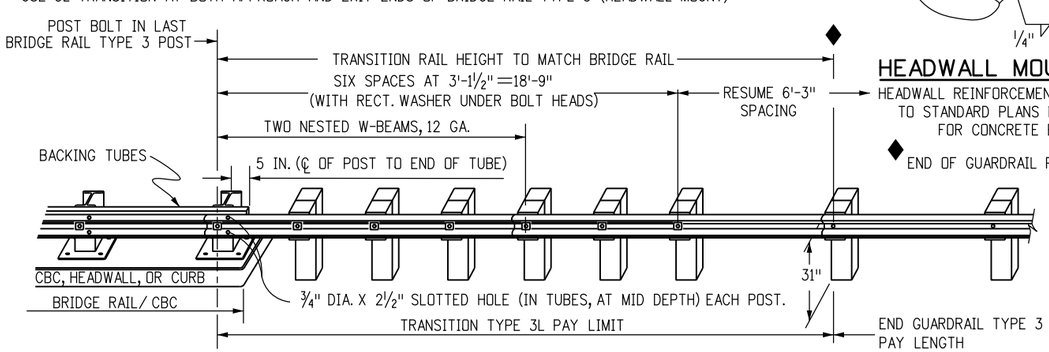

TRANSITION TYPE 3L AND GUARDRAIL TYPE 3 APPROACH

HEADWALL MOUNT ON CBC

HEADWALL REINFORCEMENT SHALL BE ACCORDING TO STANDARD PLANS M-601-1, 2, AND 3 FOR CONCRETE BOX CULVERTS.

◆ END OF GUARDRAIL PAY LENGTH

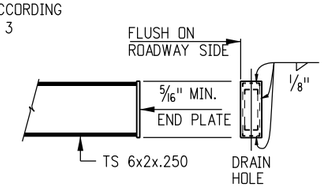

BACKING TUBES END DETAIL

(FOR HEADWALL MOUNT)

TUBES SHALL BE CONTINUOUS. NEITHER BOLTED NOR WELDED SPLICES WILL BE ALLOWED.

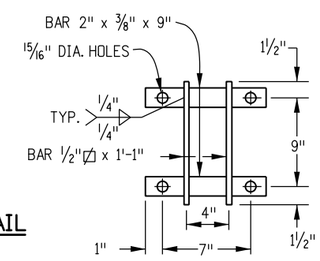

● ANCHOR DETAIL

(FOR HEADWALL MOUNT)

NOTES

1. LOCATION AND LENGTH OF MEDIAN GUARDRAIL APPROACHES TO CULVERTS WITH FULL HEADWALL AND WINGWALLS SHALL BE AS SHOWN FOR BRIDGES ON SHEET 16. THE GUARDRAIL TYPE 3 SHALL CONTINUE ACROSS THE CULVERT AS SHOWN ON THIS SHEET.
2. RIGHT SHOULDER BOX CULVERT TREATMENT IS SHOWN ON THIS SHEET FOR CULVERTS 20 FT. OR LESS IN LENGTH.
3. GUARDRAIL ACROSS CULVERTS WITH A LENGTH OF 20 FT. OR LESS SHALL BE AS FOLLOWS:
   A. FILL HEIGHT AT GUARDRAIL POST 48 IN. OR GREATER: CONSTRUCTION AND PAYMENT WILL BE AS GUARDRAIL TYPE 3.
   B. FILL HEIGHT AT GUARDRAIL POST LESS THAN 48 IN. AND BLOCK FACE TO HEADWALL OFFSET OF 3 FT. OR GREATER: CONSTRUCTION AND PAYMENT AS GUARDRAIL TYPE 3.
   C. FILL HEIGHT AT GUARDRAIL POST 48 IN. OR LESS AND BLOCK FACE TO HEADWALL OFFSET LESS THAN 3 FT: CONSTRUCTION ACCORDING TO HEADWALL MOUNT DETAILS AND PAYMENT AS BRIDGE RAIL TYPE 3.
4. GUARDRAIL ACROSS CULVERTS WITH LENGTH GREATER THAN 20 FT. SHALL BE AS FOLLOWS:
   A. FILL HEIGHT AT GUARDRAIL POSTS 48 IN. OR GREATER: CONSTRUCTION AND PAYMENT WILL BE FOR STANDARD GUARDRAIL TYPE 3.
   B. FILL HEIGHT AT GUARDRAIL POSTS 48 IN. OR LESS: CONSTRUCTION AND PAYMENT IN ACCORDANCE WITH THE CONTRACT BRIDGE PLANS. WHEN BLOCK FACE TO HEADWALL OFFSET IS 3 FT. OR GREATER: CONSTRUCTION AND PAYMENT AS GUARDRAIL TYPE 3.
5. ANCHORAGE D: SIX BOLTS FOR BASE PLATE "B" WITH INSIDE MOUNT. THE BOLTS SHALL BE 7/8 IN. DIA X 10 IN. HIGH STRENGTH RODS THREADED FULL LENGTH AND ALL GALVANIZED. RODS SHALL BE CAST-IN-PLACE FOR A NEW STRUCTURE. FOR AN EXISTING STRUCTURE, THE RODS SHALL BE INSTALLED IN 1-1/4 IN. DIA HOLES WITH NON-SHRINK GROUT OR EPOXY CONFORMING TO ASTM C 881.
6. TYPE 3L POSTS SHALL BE STEEL OR WOOD TO MATCH POSTS USED ON THE APPROACH GUARDRAIL.
7. THE GUARDRAIL LENGTH DIMENSION "N" IS THE LENGTH AS DETERMINED BY THE LENGTH OF NEED COMPUTATION AND IS SHOWN ON THE PLANS. THE MINIMUM IS 12 FT.-6 IN. WHERE SITE CONDITIONS ALLOW. THE OVERALL REQUIRED LENGTH OF NEED CAN INCLUDE THE LENGTH OF TRANSITION, THE LENGTH OF RAIL (N), AND ANY REDIRECTIVE LENGTH IN THE RAIL END TREATMENT.
8. ALL BRIDGE RAIL TYPE 3 BACKING TUBES SHALL BE FABRICATED FROM ASTM A 500 GRADE B. ALL POSTS, BASE PLATES, AND ANCHOR BOLTS SHALL BE FABRICATED FROM ASTM A 36 STEEL. THE ABOVE MATERIAL, W-BEAM, AND ALL ANCHOR BOLTS AND MISCELLANEOUS BOLTS, NUTS, AND WASHERS SHALL BE GALVANIZED AFTER FABRICATION IN ACCORDANCE WITH SECTION 509. CONCRETE, REINFORCING STEEL, AND STRUCTURAL STEEL ELEMENTS SHALL BE IN ACCORDANCE WITH SECTIONS 601, 602, AND 509, RESPECTIVELY.
9. POST ANCHORS, ENCASED IN CONCRETE, SHALL BE ASTM A 36 STEEL, AND NEED NOT BE GALVANIZED.
10. PRIOR TO FABRICATION OF BRIDGE RAIL, THREE SETS OF WORKING DRAWINGS WHICH COMPLY WITH THE REQUIREMENTS OF SECTION 105 SHALL BE SUBMITTED TO THE ENGINEER FOR INFORMATION ONLY.
11. IF HEADWALL MOUNT GUARDRAIL IS USED, SEE STANDARD PLAN M-601, AND NOTES BELOW:
    A. ALL ITEMS ABOVE TOP OF CBC HEADWALL WILL BE MEASURED AND PAID FOR AS LINEAR FEET OF BRIDGE RAIL TYPE 3.
    B. HEADWALL MOUNTING OF RAIL WILL NOT BE MEASURED AND PAID FOR SEPARATELY BUT SHALL BE INCLUDED IN THE WORK.

★ FOR STANDARD 12 IN. HEADWALL WITH NO PAVEMENT, THE POST HEIGHT SHALL BE 1 FT.- 6 IN. ADJUST POST HEIGHT FOR PAVEMENT THICKNESS.

● ONE ANCHOR ASSEMBLY SHALL BE PLACED FOR EACH RAIL POST.

Computer File Information		Sheet Revisions	
Creation Date: 08/19/15 Initials: DLM		Date:	Comments
Last Modification Date: 12/29/15 Initials: LTA	(R-X)	12/29/15	Raised guardrail height to 31".
Full Path: www.codot.gov/business/designsupport	(R-X)		
Drawing File Name: 60601020020.dgn	(R-X)		
CAD Ver.: MicroStation V8 Scale: Not to Scale Units: English	(R-X)		

Colorado Department of Transportation
4201 East Arkansas Avenue
CDOT HQ, 4th Floor
Denver, CO 80222
Phone: 303-757-9021 FAX: 303-757-9868
Division of Project Support DLM/LTA

MIDWEST GUARDRAIL SYSTEM (MGS) TYPE 3 W-BEAM 31 INCHES

Issued By: Project Development Branch July 4, 2012

STANDARD PLAN NO.

M-606-1

Sheet No. 20 of 20

- PEDESTRIAN PUSH BUTTON POST ASSEMBLY (PPBPA).
SEE NOTE 8.
SEE STANDARD PLAN S-614-9 FOR PPBPA DETAILS.
SEE PLANS FOR LOCATIONS.
THE SIGN FACE SHALL BE PARALLEL TO THE CROSSWALK.

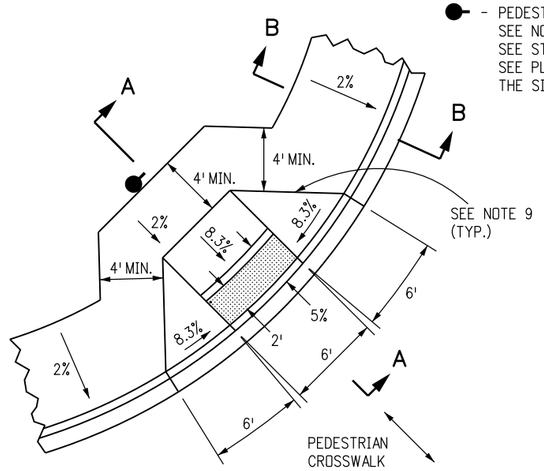

CURB RAMP TYPE 1A

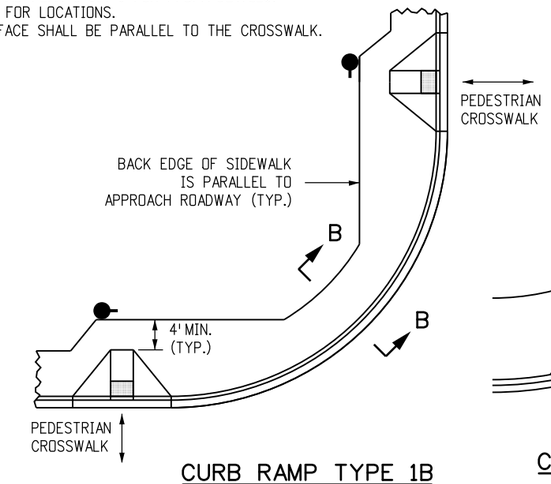

CURB RAMP TYPE 1B

SEE NOTE 11

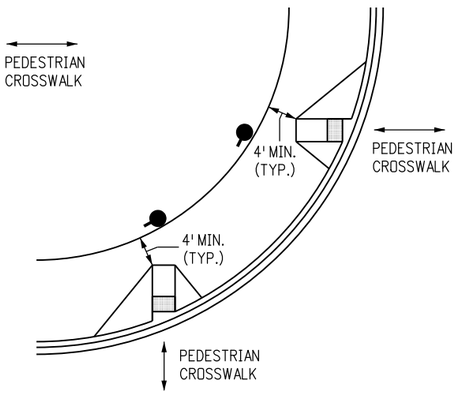

CURB RAMP TYPE 1B MODIFIED

USE ONLY IF EXISTING ROW DICTATES.
GRADE BREAKS SHALL NOT BE PERMITTED ON THE SURFACE OF THE RAMP RUNS AND TURNING SPACES.
SURFACE SLOPES THAT MEET AT GRADE BREAKS SHALL BE FLUSH.
SEE NOTE 11.

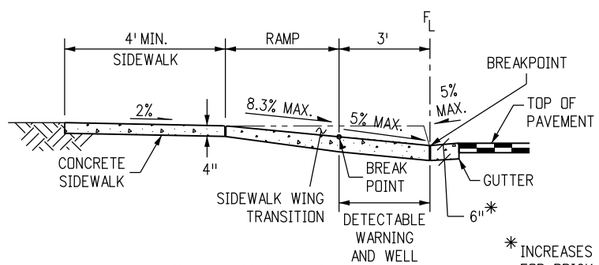

* INCREASES TO 8" FOR BRICK PAVERS.

SECTION A-A

(PPBPA NOT SHOWN IN SECTION VIEWS AS IT MAY NOT BE REQUIRED.)

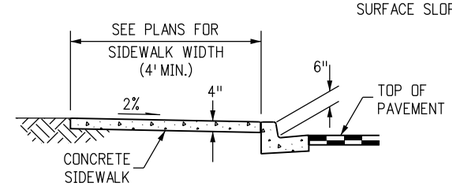

SECTION B-B

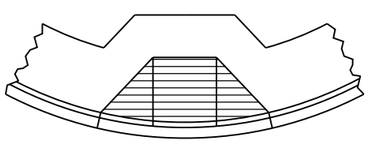

RAMP PAY AREA

FOR CURB RAMPS
TYPES 1A AND 1B

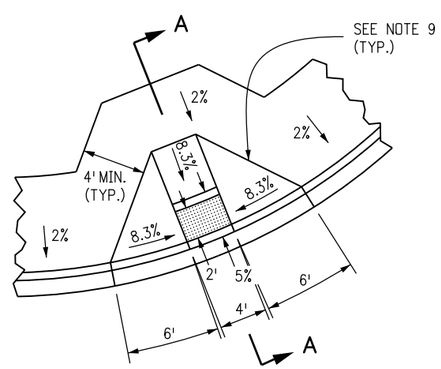

RAMP DETAIL

FOR CURB RAMP
TYPE 1B

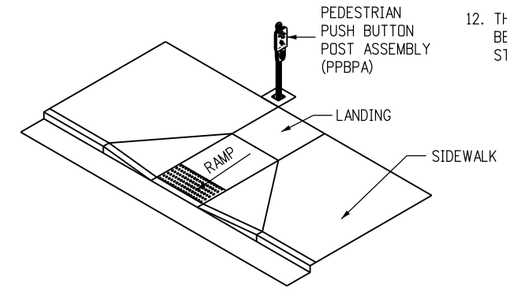

CURB RAMP WITH PEDESTRIAN PUSH BUTTTON POST

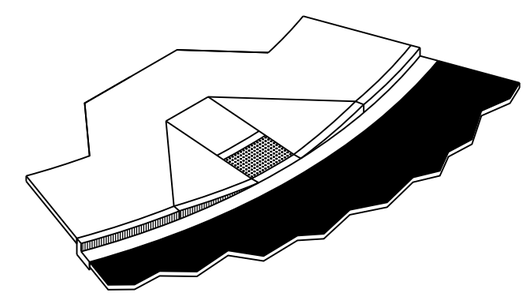

ISOMETRIC VIEW

GENERAL NOTES

1. THE DETECTABLE WARNINGS SHALL BE INSTALLED AT SIDEWALK TO STREET TRANSITIONS. THEY SHALL HAVE A TRUNCATED DOME SURFACE. THE DOMES SHALL BE IN A SQUARE GRID PATTERN.
2. ALL DETECTABLE WARNING AREAS SHALL START A MINIMUM OF 6 IN. FROM THE FLOW LINE OF THE CURB AND NOT BE MORE THAN A MAXIMUM OF 8 IN. (WITH EXCEPTION FOR THE TYPE 1B MODIFIED AND TYPE 3B MODIFIED AS THIS DIMENSION MAY BE GREATER THAN 8 INCHES ON ONE SIDE OF THE RADIUS) FROM ANY POINT ON THE FLOW LINE OF THE CURB. ALL DETECTABLE WARNING AREAS SHALL BE 2 FT. IN LENGTH AND COVER THE COMPLETE WIDTH OF THE RAMP AREA ONLY.
3. RAMP SLOPES SHALL BE 8.3% OR FLATTER. THE DETECTABLE WARNING SLOPES SHALL BE 5% OR FLATTER.
4. MINIMUM SIDEWALK WIDTH IS 4 FT.
5. DO NOT INSTALL DRAINAGE STRUCTURES, TRAFFIC SIGNAL EQUIPMENT, JUNCTION BOXES, AND OTHER OBSTRUCTIONS IN FRONT OF THE RAMP ACCESS AREAS.
6. CONSTRUCTION OF THE CONCRETE PEDESTRIAN CURB ADJACENT TO THE RAMP AREAS SHALL BE INCLUDED IN THE BID PRICE OF THE CONCRETE CURB RAMP.
7. DETECTABLE WARNINGS SHALL MEET SECTION 705 OF THE USDOT ADA STANDARDS FOR TRANSPORTATION FACILITIES.
8. IF THE PLACEMENT OF A PEDESTRIAN PUSH BUTTON ASSEMBLY ON A TRAFFIC SIGNAL MAST POLE WILL NOT BE WITHIN EASY REACH (10" OR LESS AND UNOBSTRUCTED) OF PEDESTRIANS (IN ACCORDANCE WITH THE AMERICANS WITH DISABILITIES ACT), THEN A SEPERATE PEDESTRIAN PUSH BUTTON POST ASSEMBLY (PPBPA) SHALL BE INSTALLED WITHIN EASY REACH. THE PPBPA SHALL MEET THE PROVISIONS FOUND IN "SECTION 4E.08 THROUGH 4E.13 - PEDESTRIAN DETECTORS" OF THE 2009 MUTCD MANUAL WITH REVISIONS 1 AND 2.
9. WHERE SPACE IS LIMITED OR GRADE IS AN ISSUE, A 10% SLOPE MAY BE USED ON FLARED SIDES.
10. THE SLOPES CAN BE LOWER THAN WHAT IS SHOWN BUT THEY SHALL NOT EXCEED THESE VALUES.
11. CURB RAMP TYPE 1A DIAGONAL (ON THE APEX) IS UNACCEPTABLE IN NEW CONSTRUCTION. TYPICALLY, TWO CURB RAMPS AS IN TYPE 1B, MUST BE PROVIDED AT EACH STREET CORNER.
    ADA TITLE II 28 C.F.R. SECTION 35.151(B) STATES:
    ALTERATIONS HAVE TO BE MADE READILY ACCESSIBLE, WITHIN THE IMPACTING PROJECT, TO THE MAXIMUM EXTENT FEASIBLE (MEF).
    THEREFORE, A SINGLE, DIAGONAL CURB RAMP TYPE 1A WILL ONLY BE PERMITTED ON ALTERATION PROJECTS WITH MEF JUSTIFICATION DOCUMENTATION IN ACCORDANCE TO CDOT PROCEDURAL DIRECTIVE 605.1 AND IN COORDINATION WITH THE ADA TITLE II COORDINATOR.
12. THE CURB RAMP (EXCLUDING ANY FLARED SIDES) OR BLENDED TRANSITION SHALL BE CONTAINED WHOLLY WITHIN THE WIDTH OF THE CROSSWALK AND/OR PEDESTRIAN STREET CROSSING THE RAMP SERVES.

Computer File Information		Sheet Revisions	
Creation Date: 07/04/12 Initials: DLM		Date:	Comments
Last Modification Date: 05/06/14 Initials: LTA	R-X		
Full Path: www.coloradodot.info/business/designsupport	R-X		
Drawing File Name: 608010107.dgn	R-X		
CAD Ver.: MicroStation V8 Scale: Not to Scale Units: English	R-X		

Colorado Department of Transportation
4201 East Arkansas Avenue
CDOT HQ, 4th Floor
Denver, CO 80222
Phone: 303-757-9021 FAX: 303-757-9868
Division of Project Support DLM/LTA

CURB RAMPS

Issued By: Project Development Branch on July 4, 2012

STANDARD PLAN NO.
M-608-1
Sheet No. 1 of 7

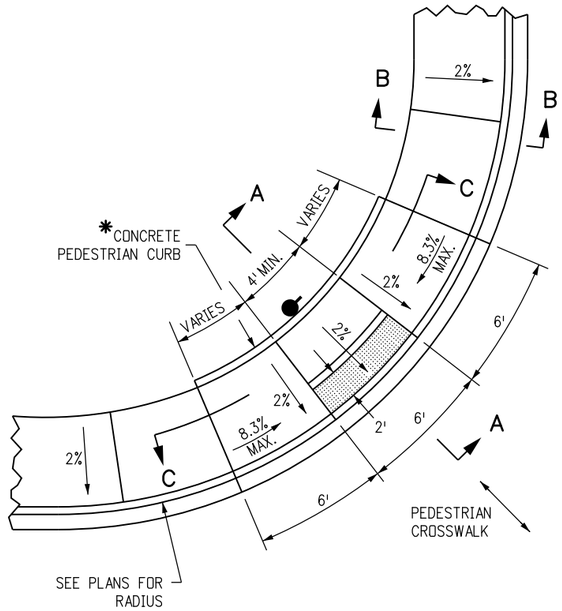

CURB RAMP TYPE 2A

SEE NOTE 3.

● - PEDESTRIAN PUSH BUTTON POST ASSEMBLY (PPBPA).
SEE NOTE 8 ON SHEET 1 OF 7.
SEE STANDARD PLAN S-614-9 FOR PPBPA DETAILS.
SEE PLANS FOR LOCATIONS.
THE SIGN FACE SHALL BE PARALLEL TO THE CROSSWALK.

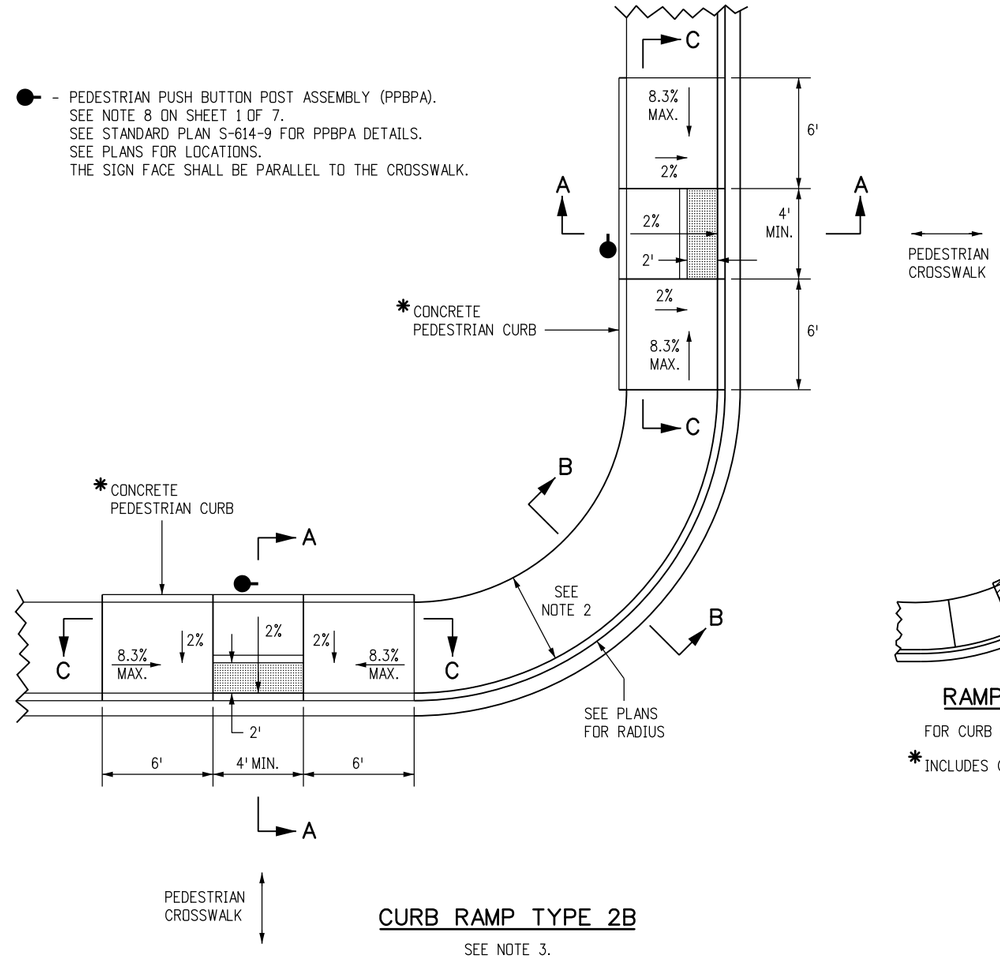

CURB RAMP TYPE 2B

SEE NOTE 3.

NOTES

1. CURB RAMP TYPE 2A MAY BE USED IN MID-BLOCK.
2. SEE PLANS FOR SIDEWALK WIDTH. THE MINIMUM SIDEWALK WIDTH IS 4 FT.
3. CURB RAMP TYPE 2A DIAGONAL (ON THE APEX) IS UNACCEPTABLE IN NEW CONSTRUCTION. TYPICALLY, TWO CURB RAMPS AS IN TYPE 2B, MUST BE PROVIDED AT EACH STREET CORNER.
   ADA TITLE II 28 C.F.R. SECTION 35.151(B) STATES:
   ALTERATIONS HAVE TO BE MADE READILYACCESSIBLE, WITHIN THE IMPACTING PROJECT, TO THE MAXIMUM EXTENT FEASIBLE (MEF).
   THEREFORE, A SINGLE, DIAGONAL CURB RAMP TYPE 2A WILL ONLY BE PERMITTED ON ALTERATION PROJECTS WITH MEF JUSTIFICATION DOCUMENTATION IN ACCORDANCE TO CDOT PROCEDURAL DIRECTIVE 605.1 AND IN COORDINATION WITH THE ADA TITLE II COORDINATOR.

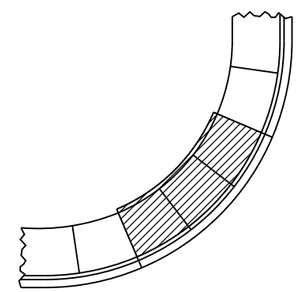

RAMP PAY AREA

FOR CURB RAMP TYPES 2A AND 2B.

*INCLUDES CONCRETE PEDESTRIAN CURB AS SHOWN.

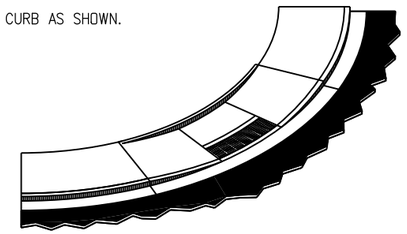

ISOMETRIC VIEW

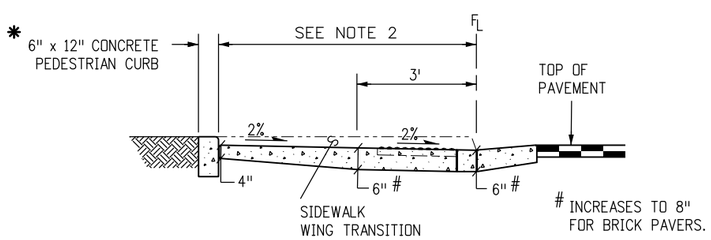

SECTION A-A

(PPBPA NOT SHOWN IN SECTION VIEWS AS IT MAY NOT BE REQUIRED.)

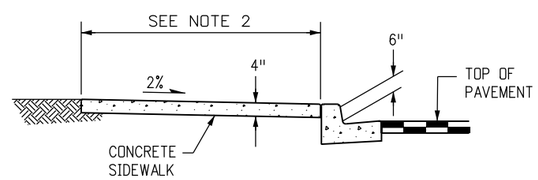

SECTION B-B

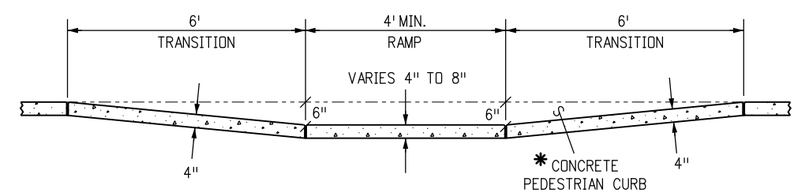

SECTION C-C

Computer File Information		Sheet Revisions	
Creation Date: 07/04/12 Initials: DLM		Date:	Comments
Last Modification Date: 04/28/14 Initials: LTA	(R-X)	04/22/14	Made ramps perpendicular in 2B. Added note 3.
Full Path: www.coloradodot.info/business/designsupport	(R-X)		
Drawing File Name: 608010207.dgn	(R-X)		
CAD Ver.: MicroStation V8 Scale: Not to Scale Units: English	(R-X)		

Colorado Department of Transportation
4201 East Arkansas Avenue
CDOT HQ, 4th Floor
Denver, CO 80222
Phone: 303-757-9021 FAX: 303-757-9868
Division of Project Support DLM/LTA

CURB RAMPS

Issued By: Project Development Branch on July 4, 2012

STANDARD PLAN NO.

M-608-1

Sheet No. 2 of 7

● - PEDESTRIAN PUSH BUTTON POST ASSEMBLY (PPBPA).
SEE NOTE 8 ON SHEET 1 OF 7.
SEE STANDARD PLAN S-614-9 FOR PPBPA DETAILS.
SEE PLANS FOR LOCATIONS.
THE SIGN FACE SHALL BE PARALLEL TO THE CROSSWALK.

NOTES

1. CURB RAMP TYPE 3A MAY BE USED IN MID-BLOCK.
2. SEE PLANS FOR SIDEWALK WIDTH. THE MINIMUM SIDEWALK WIDTH IS 4 FT.
3. CURB RAMP TYPE 3A DIAGONAL (ON THE APEX) IS UNACCEPTABLE IN NEW CONSTRUCTION. TYPICALLY, TWO CURB RAMPS AS IN TYPE 3B, MUST BE PROVIDED AT EACH STREET CORNER.
   ADA TITLE II 28 C.F.R. SECTION 35.151(B) STATES:
   ALTERATIONS HAVE TO BE MADE READILYACCESSIBLE, WITHIN THE IMPACTING PROJECT, TO THE MAXIMUM EXTENT FEASIBLE (MEF).
   THEREFORE, A SINGLE, DIAGONAL CURB RAMP TYPE 3A WILL ONLY BE PERMITTED ON ALTERATION PROJECTS WITH MEF JUSTIFICATION DOCUMENTATION IN ACCORDANCE TO CDOT PROCEDURAL DIRECTIVE 605.1 AND IN COORDINATION WITH THE ADA TITLE II COORDINATOR.

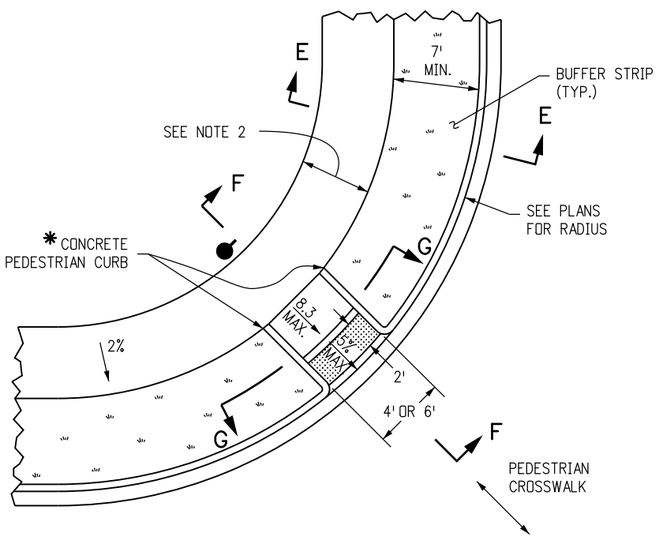

CURB RAMP TYPE 3A

SEE NOTE 3.

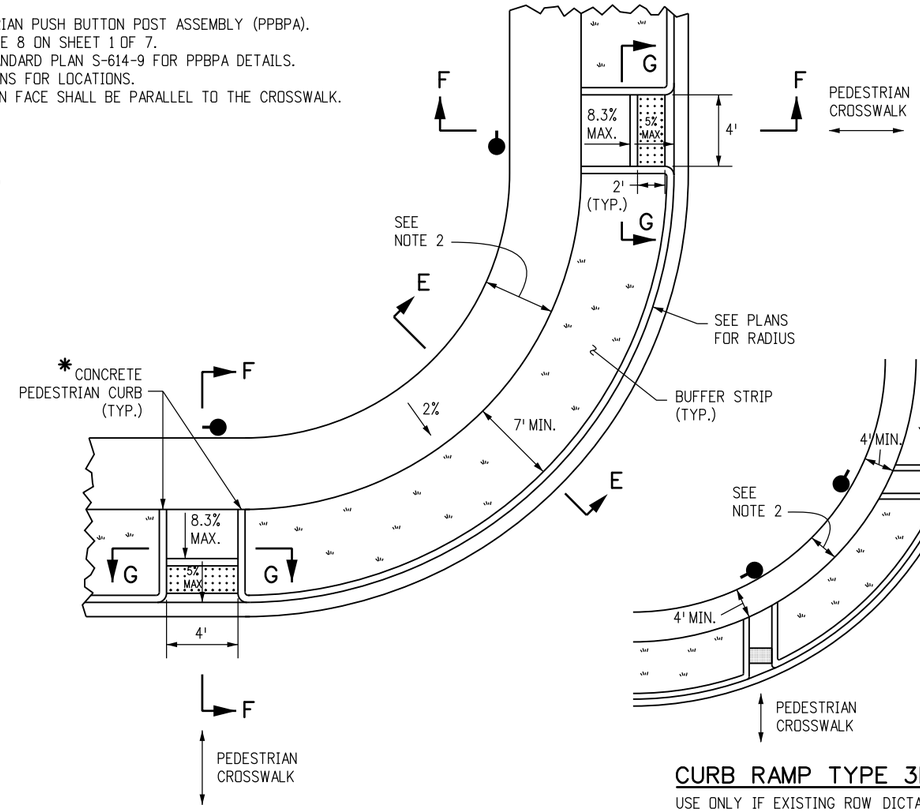

CURB RAMP TYPE 3B

SEE NOTE 3.

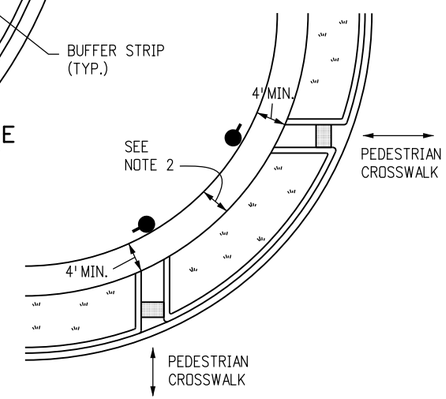

CURB RAMP TYPE 3B MODIFIED

USE ONLY IF EXISTING ROW DICTATES.
GRADE BREAKS SHALL NOT BE PERMITTED ON THE SURFACE OF THE RAMP RUNS AND TURNING SPACES.
SURFACE SLOPES THAT MEET AT GRADE BREAKS SHALL BE FLUSH. SEE NOTE 3.

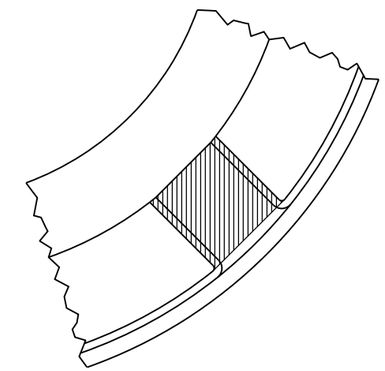

RAMP PAY AREA

FOR CURB RAMP TYPES 3A AMD 3B.

* INCLUDES CONCRETE PEDESTRIAN CURB AS SHOWN.

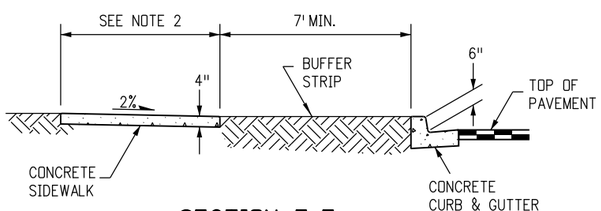

SECTION E-E

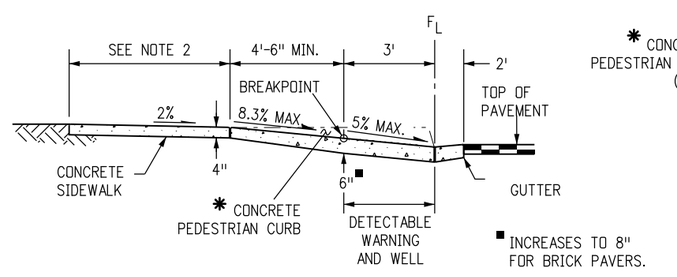

SECTION F-F

(PPBPA NOT SHOWN IN SECTION VIEWS AS IT MAY NOT BE REQUIRED.)

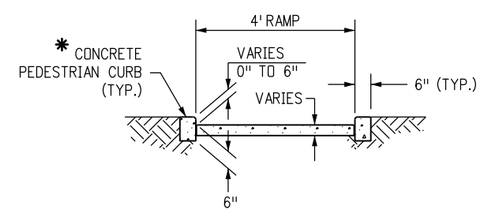

SECTION G-G

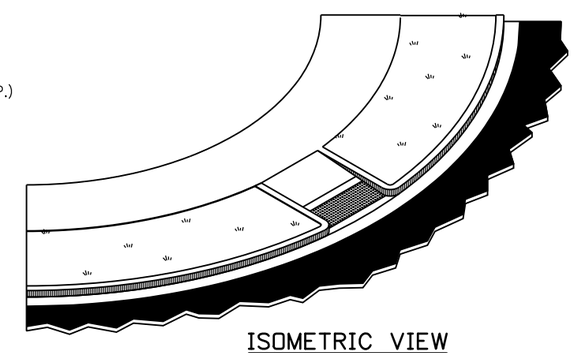

ISOMETRIC VIEW

Computer File Information		Sheet Revisions	
Creation Date: 07/04/12 Initials: DLM		Date:	Comments
Last Modification Date: 04/28/14 Initials: LTA	(R-X)		
Full Path: www.coloradodot.info/business/designsupport	(R-X)		
Drawing File Name: 608010307.dgn	(R-X)		
CAD Ver.: MicroStation V8 Scale: Not to Scale Units: English	(R-X)		

Colorado Department of Transportation
4201 East Arkansas Avenue
CDOT HQ, 4th Floor
Denver, CO 80222
Phone: 303-757-9021 FAX: 303-757-9868
Division of Project Support DLM/LTA

CURB RAMPS

Issued By: Project Development Branch on July 4, 2012

STANDARD PLAN NO.
M-608-1
Sheet No. 3 of 7

NOTES

1. PERPENDICULAR AND PARALLEL CURB RAMPS SHOWN ON THIS DRAWING ARE ACCEPTABLE FOR USE AT MID-BLOCK INSTALLATIONS.
2. SITE CONDITIONS WILL VARY. CONFIGURATION OF RAMPS, LANDINGS, AND TRANSITIONS MAY BE CHANGED BUT THEY MUST MEET THE DIMENSIONS AND SLOPES SHOWN HERE. THE USE OF FLARES, CURBWALLS, ETC. ARE AT THE DISCRETION OF THE ENGINEER.
3. PROVIDE DETECTABLE WARNING SURFACE FOR FULL WIDTH OF CURB CUT. SEE "PLAN VIEW OF DETECTABLE WARNING" DETAIL ON SHEET 5 FOR DETECTABLE WARNING SURFACE DIMENSIONS.
4. LOCATE CURB CUT WITHIN CROSSWALK.
5. RAMP GRADE BREAK MUST BE PERPENDICULAR TO THE RUNNING SLOPE.

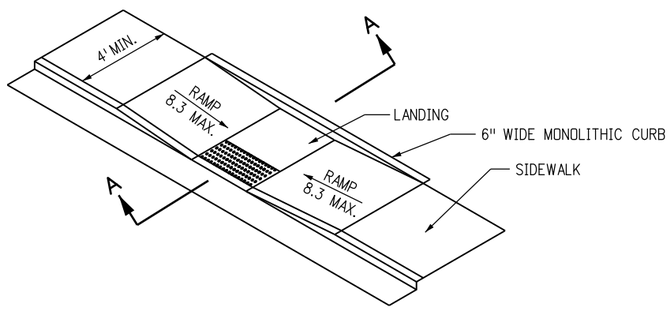

PARALLEL CURB RAMP WITHIN 4 FT. MIN. SIDEWALK

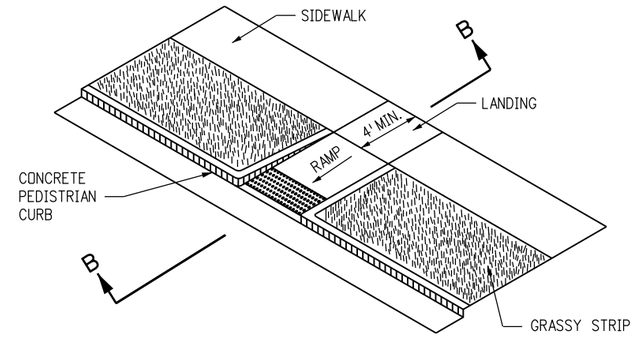

PERPENDICULAR CURB RAMP

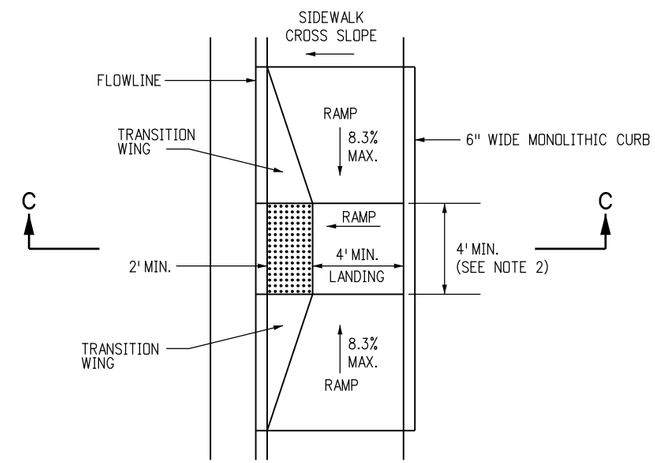

CURB RAMP WITHIN 6 FT. MIN. SIDEWALK

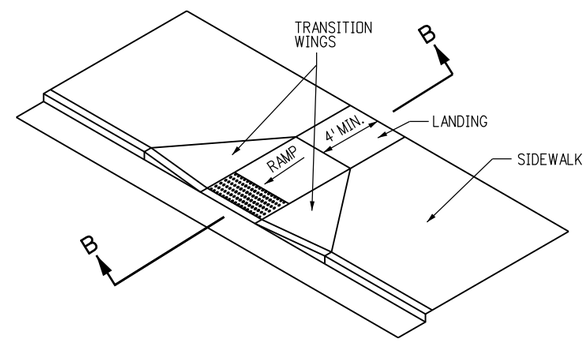

PERPENDICULAR CURB RAMP WITHIN SIDEWALK

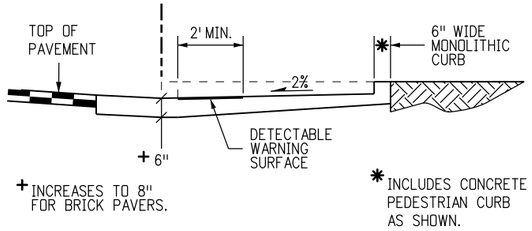

SECTION A-A

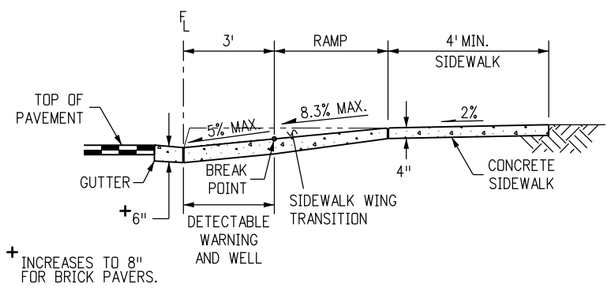

SECTION B-B

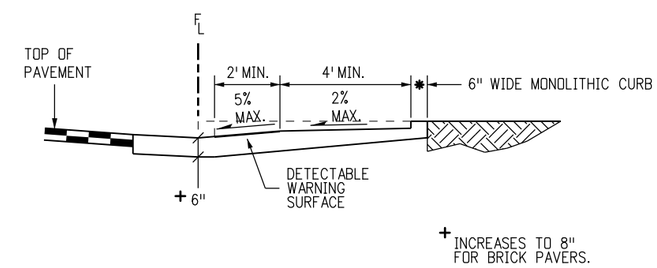

SECTION C-C

Computer File Information		
Creation Date: 07/04/12	Initials: DLM	
Last Modification Date: 04/28/14	Initials: LTA	(R-X)
Full Path: www.coloradodot.info/business/designsupport		(R-X)
Drawing File Name: 608010407.dgn		(R-X)
CAD Ver.: MicroStation V8 Scale: Not to Scale Units: English		(R-X)

Sheet Revisions	
Date:	Comments

Colorado Department of Transportation
4201 East Arkansas Avenue
CDOT HQ, 4th Floor
Denver, CO 80222
Phone: 303-757-9021 FAX: 303-757-9868
Division of Project Support DLM/LTA

CURB RAMPS

Issued By: Project Development Branch on July 4, 2012

STANDARD PLAN NO.

M-608-1

Sheet No. 4 of 7

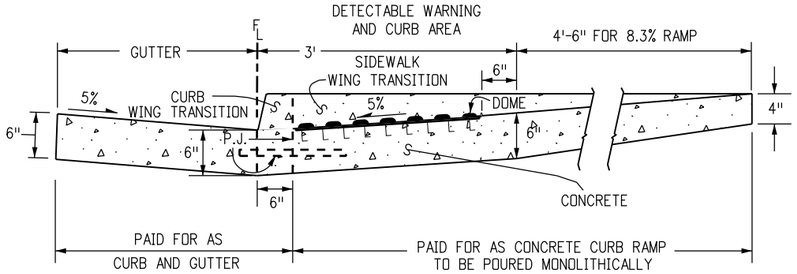

DETAIL FOR TYPES 1 AND 3 CURB RAMPS

P.J. = PERMISSIBLE JOINT WITH EPOXY-COATED DEFORMED NO. 4 BY 18 IN. BARS CONFORMING TO AASHTO M 284 AT 18 IN. SPACING.

SIDE CROSS SECTION VIEW OF DETECTABLE WARNING, CURB, AND GUTTER

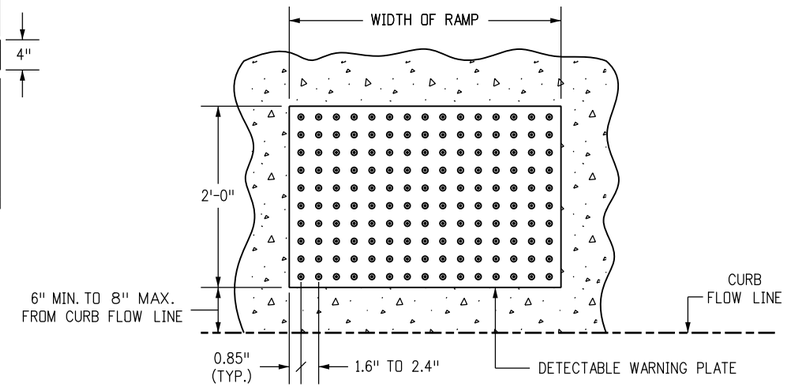

PLAN VIEW OF DETECTABLE WARNING

NOTES

1. THE TRUNCATED DOME PLATE SHALL BE EMBEDDED IN THE CONCRETE CURB RAMP WHILE CONCRETE IS PLASTIC.
2. THE TRUNCATED DOME PLATE TO BE USED SHALL BE ON THE CDOT APPROVED PRODUCT LIST.
3. WHEN THE DETECTABLE WARNING SURFACE IS CUT, GRIND OFF REMAINING PORTION OF ANY CUT DOMES. SEAL ALL CUT PANEL EDGES TO PREVENT WATER DAMAGE.
4. THE DETECTABLE WARNING SURFACE SHALL SPAN THE ENTIRE WIDTH OF THE RAMP. IF CONDITIONS DO NOT ALLOW THE ENTIRE SPAN, THE DECTECTABLE WARNING SURFACE SPAN SHALL NOT BE MORE THAN 2 INCHES AWAY FROM EACH SIDE OF RAMP.

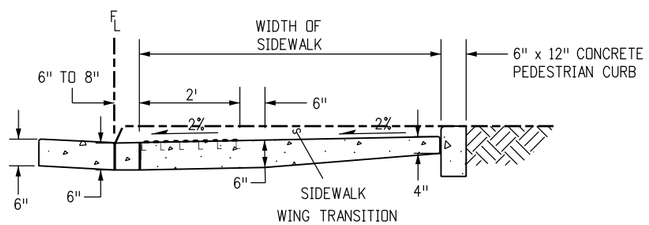

DETAIL FOR TYPE 2 CURB RAMP

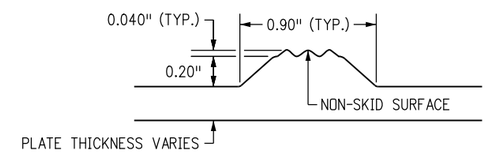

ELEVATION VIEW OF DETECTABLE WARNING PLATE

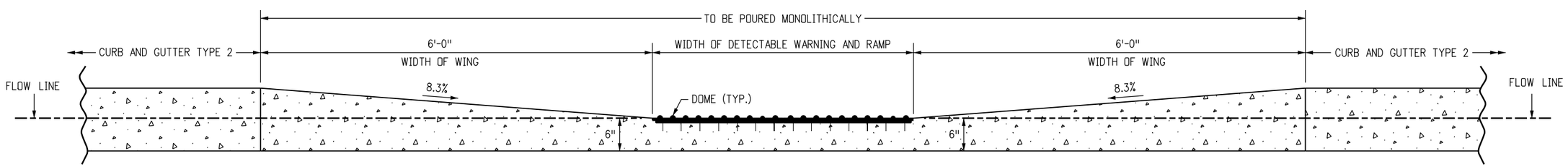

FRONT SECTION VIEW OF DETECTABLE WARNING, CURB, AND GUTTER

CURB RAMP WITH A TRUNCATED DOME SURFACE PLATE

Computer File Information		Sheet Revisions	
Creation Date: 07/04/12 Initials: DLM		Date:	Comments
Last Modification Date: 4/28/14 Initials: LTA	(R-X)		
Full Path: www.coloradodot.info/business/designsupport	(R-X)		
Drawing File Name: 608010507.dgn	(R-X)		
CAD Ver.: MicroStation V8 Scale: Not to Scale Units: English	(R-X)		

Colorado Department of Transportation
4201 East Arkansas Avenue
CDOT HQ, 4th Floor
Denver, CO 80222
Phone: 303-757-9021 FAX: 303-757-9868
Division of Project Support DLM/LTA

CURB RAMPS

Issued By: Project Development Branch on July 4, 2012

STANDARD PLAN NO.
M-608-1
Sheet No. 5 of 7

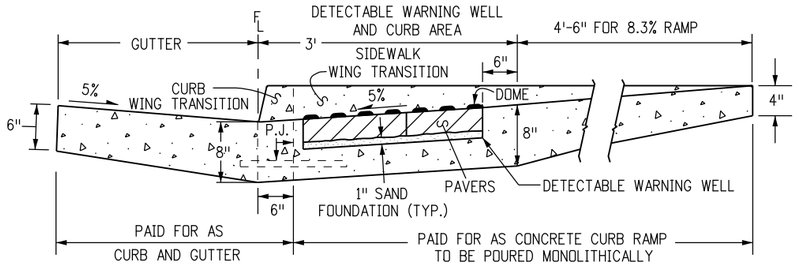

DETAIL FOR TYPES 1 AND 3 CURB RAMPS

P.J. = PERMISSIBLE JOINT WITH EPOXY-COATED DEFORMED NO. 4 BY 18 IN. BARS CONFORMING TO AASHTO M 284 AT 18 IN. SPACING.

SIDE CROSS SECTION VIEW OF DETECTABLE WARNING, WELL, CURB, AND GUTTER

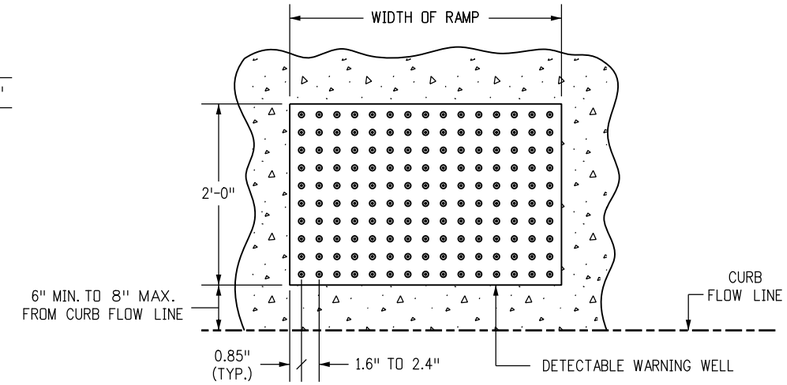

PLAN VIEW OF DETECTABLE WARNING AND WELL

(PAVERS NOT DRAWN TO SCALE)

NOTES

1. THE DETECTABLE WARNINGS SHALL BE BE MADE OF PAVERS WITH A TRUNCATED DOME SURFACE.
2. THE TOP OF THE DRAINAGE WEEP HOLE SHALL BE LOCATED AT THE LOWEST POINT OF THE DETECTABLE WARNING WELL.
3. RAMP SLOPES SHALL BE 12:1 OR FLATTER. THE DETECTABLE WARNING AND WELL AREA SLOPES SHALL BE 20:1 OR FLATTER.
4. THE DETECTABLE WARNING SURFACE SHALL SPAN THE ENTIRE WIDTH OF THE RAMP. IF CONDITIONS DO NOT ALLOW THE ENTIRE SPAN, THE DECTECTABLE WARNING SURFACE SPAN SHALL NOT BE MORE THAN 2 INCHES AWAY FROM EACH SIDE OF RAMP.

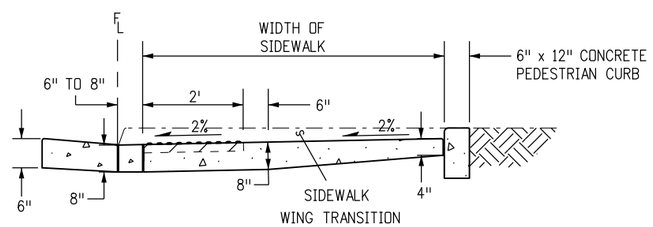

DETAIL FOR TYPE 2 CURB RAMP

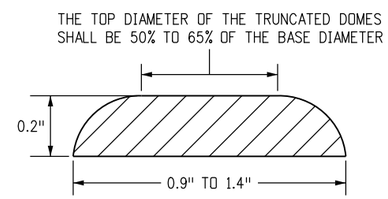

ELEVATION VIEW OF SINGLE DOME

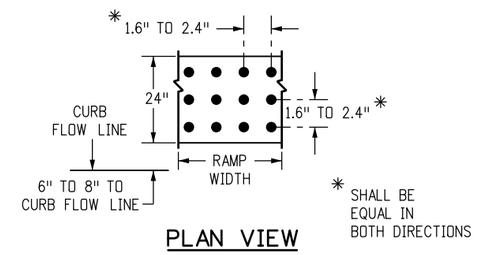

PLAN VIEW

DOME AND DETECTABLE WARNING DETAILS

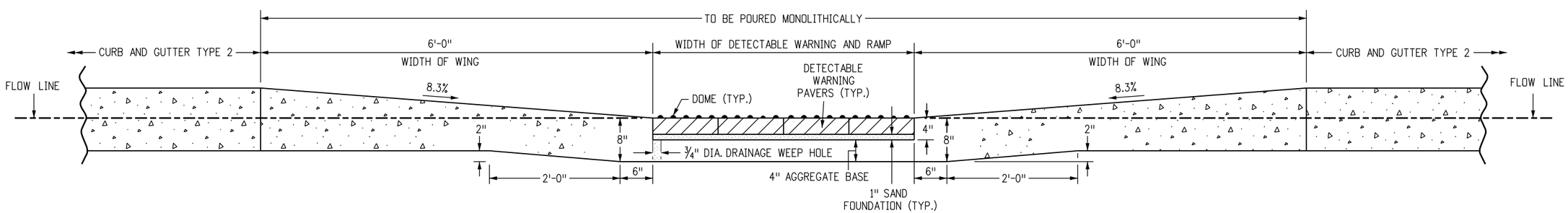

FRONT SECTION VIEW OF DETECTABLE WARNING, WELL, CURB, AND GUTTER

CURB RAMP WITH DOME PAVER OPTION

Computer File Information		
Creation Date: 07/04/12	Initials: DLM	
Last Modification Date: 4/28/14	Initials: LTA	(R-X)
Full Path: www.coloradodot.info/business/designsupport		(R-X)
Drawing File Name: 608010607.dgn		(R-X)
CAD Ver.: MicroStation V8 Scale: Not to Scale Units: English		(R-X)

Sheet Revisions	
Date:	Comments

Colorado Department of Transportation
4201 East Arkansas Avenue
CDOT HQ, 4th Floor
Denver, CO 80222
Phone: 303-757-9021 FAX: 303-757-9868
Division of Project Support DLM/LTA

CURB RAMPS

Issued By: Project Development Branch on July 4, 2012

STANDARD PLAN NO.

M-608-1

Sheet No. 6 of 7

NOTES

1. IF THE EXISTING SIDEWALK WIDTHS ARE DIFFERENT, MATCH THE SMALLEST WIDTH TO 4 FT. MIN.
2. SLOPES SHOWN AS TYPICAL IN SECTION A-A MAY BE ADJUSTED IF NECESSARY TO FIT EXISTING CONDITIONS, BUT MAY NOT EXCEED 5% SLOPE UNDER ANY CONDITIONS.
3. ALL TRUNCATED DOME PANELS OR PAVERS PLACED AT THE SAME CORNER SHALL BE MADE UP OF THE SAME UNIFORM MATERIAL TYPE.

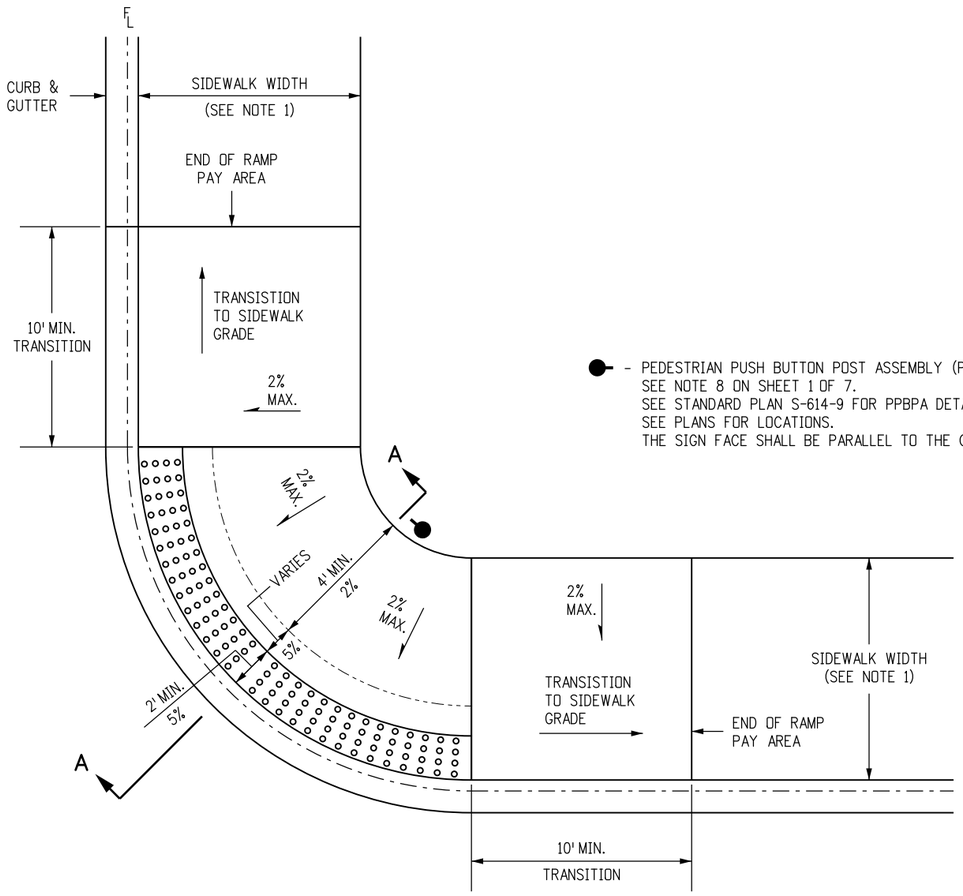

- PEDESTRIAN PUSH BUTTON POST ASSEMBLY (PPBPA).
  SEE NOTE 8 ON SHEET 1 OF 7.
  SEE STANDARD PLAN S-614-9 FOR PPBPA DETAILS.
  SEE PLANS FOR LOCATIONS.
  THE SIGN FACE SHALL BE PARALLEL TO THE CROSSWALK.

CORNER BLENDED TRANSITION CURB RAMP

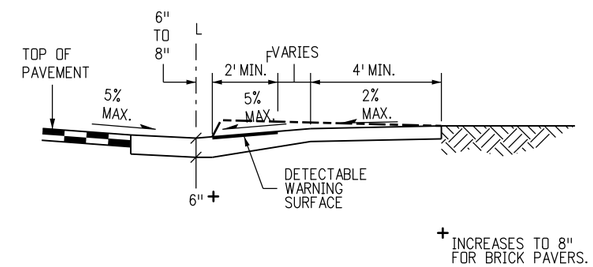

SECTION A-A

(PPBPA NOT SHOWN IN SECTION VIEWS AS IT MAY NOT BE REQUIRED.)

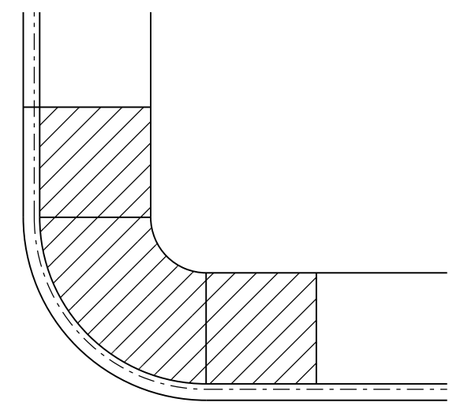

RAMP PAY AREA

FOR CORNER BLENDED TRANSITION CURB RAMP

Computer File Information		Sheet Revisions	
Creation Date: 07/04/12 Initials: DLM		Date:	Comments
Last Modification Date: 04/24/14 Initials: LTA	(R-X)		
Full Path: www.coloradodot.info/business/designsupport	(R-X)		
Drawing File Name: 608010707.dgn	(R-X)		
CAD Ver.: MicroStation V8 Scale: Not to Scale Units: English	(R-X)		

Colorado Department of Transportation
4201 East Arkansas Avenue
CDOT HQ, 4th Floor
Denver, CO 80222
Phone: 303-757-9021 FAX: 303-757-9868
Division of Project Support DLM/LTA

CURB RAMPS

Issued By: Project Development Branch on July 4, 2012

STANDARD PLAN NO.
M-608-1
Sheet No. 7 of 7

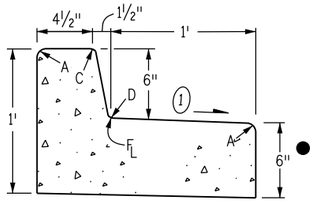

CURB AND GUTTER TYPE 2
(SECTION IB)
(6 IN. BARRIER - 1 FT. GUTTER)

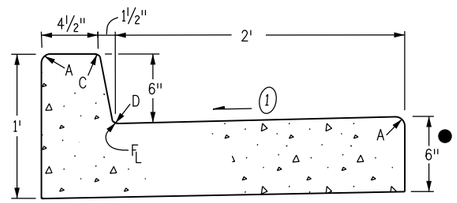

CURB AND GUTTER TYPE 2
(SECTION IIB)
(6 IN. BARRIER - 2 FT. GUTTER)

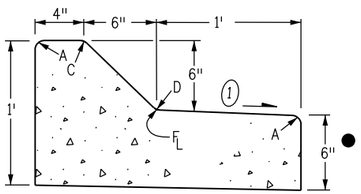

CURB AND GUTTER TYPE 2
(SECTION IM)
(6 IN. MOUNTABLE - 1 FT. GUTTER)

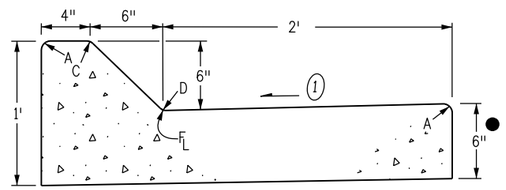

CURB AND GUTTER TYPE 2
(SECTION IIM)
(6 IN. MOUNTABLE - 2 FT. GUTTER)

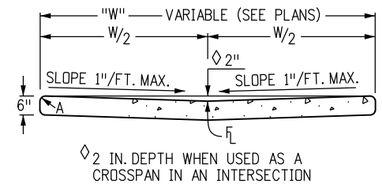

GUTTER TYPE 2

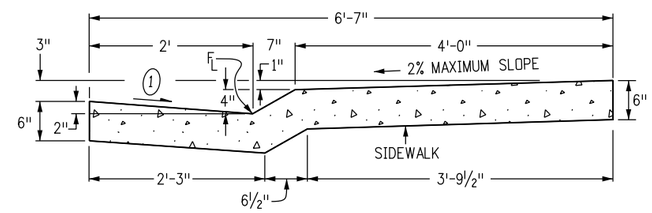

CURB AND GUTTER TYPE 2
(SECTION MS)
(4 IN. MOUNTABLE WITH SIDEWALK)

GENERAL NOTES

1. ON ROADWAY CURVES WITH A RADIUS OF 1,900 FT. OR LESS, CURBS AND GUTTERS ARE TO BE PLACED ON THE ARC OF THE CURVE, UNLESS OTHERWISE NOTED ON THE PLANS. A MAXIMUM CHORD LENGTH OF 10 FT. MAY BE USED WHEN THE CURVE RADIUS IS GREATER THAN 1,900 FT.
2. CONCRETE SHALL BE CLASS B.
3. PROFILE GRADE OF CURBS AND GUTTERS SHALL BE LOCATED AT THE FLOW LINE.
4. CURB TYPE 4 (KEY-WAY) MAY BE USED IN LIEU OF CURB AND GUTTER TYPE 2 (SECTIONS IB AND IM) UNLESS OTHERWISE SPECIFIED ON THE PLANS.
5. GUTTER CROSS SLOPES MAY BE ADJUSTED TO FACILITATE DRAINAGE FOR PROFILE GRADES AS SHOWN ON THE PLANS.
6. THICKNESS OF CURB AND GUTTER SECTION SHALL MATCH CONCRETE PAVEMENT THICKNESS IF SHOWN ON THE PLANS. CURB AND GUTTER SHALL BE CLASS P CONCRETE IF PLACED MONOLITHICALLY WITH CONCRETE PAVEMENT.
7. INCREASE SIDEWALK THICKNESS TO 6 IN. AT LOCATIONS SHOWN ON THE PLANS.
8. MINIMUM SIDEWALK WIDTH IS 4 FT.

▲ EXPANSION JOINTS SHALL BE INSTALLED WHEN ABUTTING EXISTING CONCRETE OR FIXED STRUCTURE. EXPANSION JOINT MATERIAL SHALL BE ½ IN. THICK AND SHALL EXTEND THE FULL DEPTH OF CONTACT SURFACE.

(1) GUTTER CROSS SLOPES SHALL BE ½ IN./FT. WHEN DRAINING AWAY FROM CURB AND 1 IN./FT. WHEN DRAINING TOWARD CURB (WITH EXCEPTION TO IMMEDIATELY ADJACENT TO CURB RAMPS - SEE STANDARD PLAN M-608-1 FOR SLOPE REQUIREMENTS).

● WHEN TIE BARS ARE REQUIRED, THE GUTTER THICKNESS SHALL BE INCREASED TO THE PAVEMENT THICKNESS (T). BARS SHALL BE EPOXY-COATED #4 CONFORMING TO AASHTO M 284 AND SPACED AT 3 FT. INTERVALS. THEY SHALL BE INSERTED T/2 AND 1#2 LENGTH INTO THE GUTTER.

LEGEND FOR RADII
A = ⅛" TO ¼"
B = 1"
C = 1½"
D = 1½" TO 2"

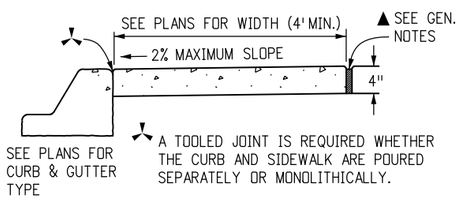

CONCRETE SIDEWALK

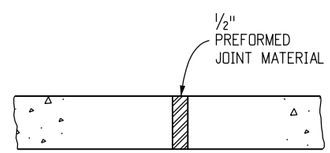

NOTES: 1. EXPANSION JOINTS SHALL BE PLACED IN THE SIDEWALK AT INTERVALS OF NOT MORE THAN 500 FT.

2. EXPANSION JOINTS MAY BE SEALED WHEN SPECIFIED ON THE PLANS.

SIDEWALK EXPANSION JOINT

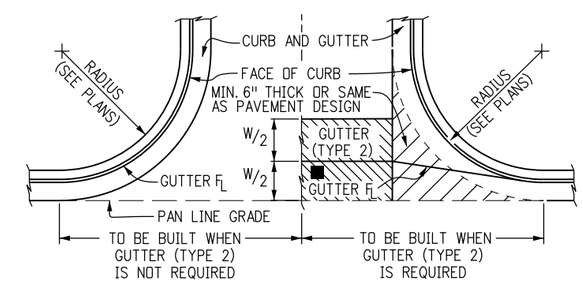

THIS AREA SHALL BE POURED MONOLITHICALLY WITH CURB AND GUTTER AND PAID FOR AS "CONCRETE PAVEMENT".

■ FLOW LINE LOCATION WILL BE ESTABLISHED BY W/2 SHOWN ON PLANS.

CONSTRUCTION OF CONCRETE GUTTERS AT INTERSECTION

Computer File Information		
Creation Date: 07/04/12	Initials: DLM	
Last Modification Date: 05/16/14	Initials: LTA	(R-X)
Full Path: www.coloradodot.info/business/designsupport		(R-X)
Drawing File Name: 609010104.dgn		(R-X)
CAD Ver.: MicroStation V8 Scale: Not to Scale Units: English		(R-X)

Sheet Revisions	
Date:	Comments
07/24/12	Changed Tie Bar spacing from 30" to 36".
05/16/14	Revised Gutter Cross Slope Note to exclude ADA Ramp

Colorado Department of Transportation
4201 East Arkansas Avenue
Denver, Colorado 80222
Phone: (303) 757-9083
Fax: (303) 757-9820
Project Development Branch DLM/LTA

CURB, GUTTERS, AND SIDEWALKS

Issued By: Project Development Branch on July 4, 2012

STANDARD PLAN NO.
M-609-1
Sheet No. 1 of 4

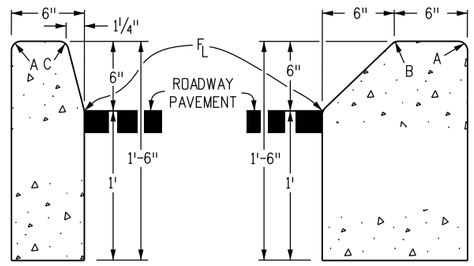

CURB TYPE 2
(SECTION B)
6 IN. BARRIER

CURB TYPE 2
(SECTION M)
6 IN. MOUNTABLE

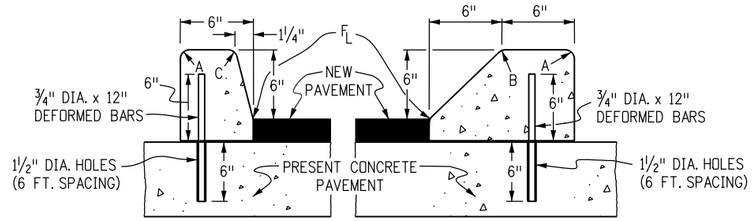

¾" DIA. x 12" DEFORMED REINFORCING BARS AT 6 FT. SPACING SHALL BE GROUTED IN 1¼" DIA. HOLES IN EXISTING CONCRETE. GROUT SHALL CONSIST OF 2 PARTS CLEAN SAND AND 1 PART CEMENT. COST OF INSTALLATION SHALL BE INCLUDED IN THE PRICE BID FOR CURB.

CURB TYPE 4
(SECTION B)
6 IN. BARRIER

CURB TYPE 4
(SECTION M)
6 IN. MOUNTABLE

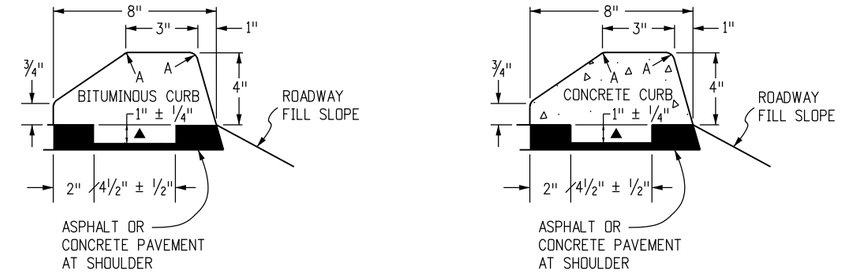

CURB TYPE 6
(SECTION M)
4 IN. MOUNTABLE

NOTE: BITUMINOUS OR CONCRETE * UNLESS OTHWISE SPECIFIED ON THE PLANS.

▲ KEY-WAY MAY BE OMITTED WHEN PLACED UNDER GUARDRAIL.

LEGEND FOR RADII
A = ⅛ TO ¼"
B = 1"
C = 1½"
D = 1½" TO 2"

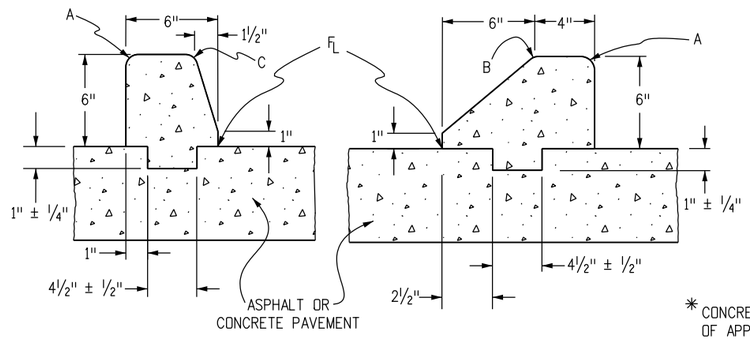

(SECTION B) (SECTION M)

CURB TYPE 4 (KEY-WAY)*

* CONCRETE CLASS B SHALL CONTAIN 1.5 POUNDS PER CUBIC YARD OF APPROVED POLYPROPYLENE FIBERS AND MAY HAVE A NOMINAL AGGREGATE SIZE OF ⅜ IN.

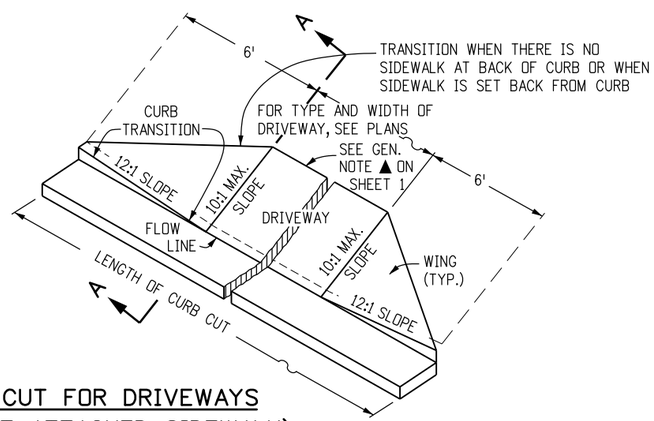

CURB CUT FOR DRIVEWAYS
(WITHOUT ATTACHED SIDEWALK)

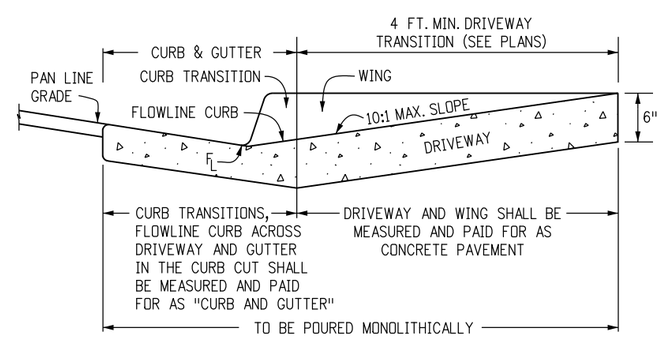

SECTION A-A

CONCRETE PAVEMENT (DRIVEWAYS)

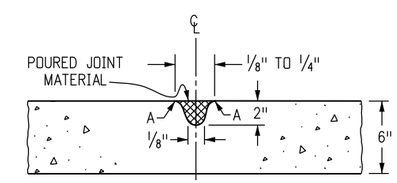

NOTE: RECOMMENED JOINT SPACING IS EVERY 8 FOOT ALONG THE WIDTH AND LENGTH OF DRIVEWAY. FOR DRIVEWAYS WIDER THAN 12 FEET, JOINTS ARE REQUIRED.

TRANSVERSE CONTRACTION JOINT
FOR CONCRETE PAVEMENT (DRIVEWAYS)

Computer File Information		
Creation Date: 07/04/12 Initials: DD		
Last Modification Date: 07/04/12 Initials: LTA	(R-X)	
Full Path: www.coloradodot.info/business/designsupport	(R-X)	
Drawing File Name: 609010204.dgn	(R-X)	
CAD Ver.: MicroStation V8 Scale: Not to Scale Units: English	(R-X)	

Sheet Revisions	
Date:	Comments

Colorado Department of Transportation
4201 East Arkansas Avenue
Denver, Colorado 80222
Phone: (303) 757-9083
Fax: (303) 757-9820
Project Development Branch DD/LTA

CURB, GUTTERS, AND SIDEWALKS

Issued By: Project Development Branch on July 4, 2012

STANDARD PLAN NO.
M-609-1
Sheet No. 2 of 4

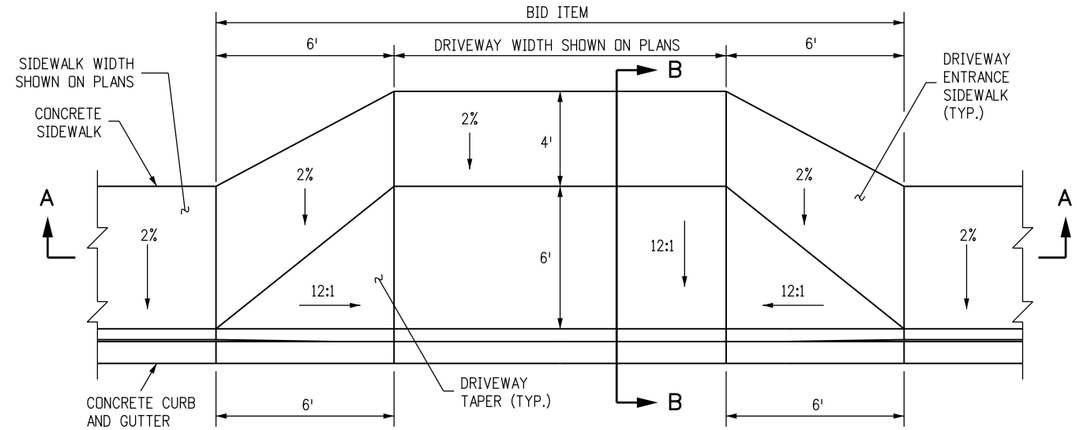

CONCRETE DRIVEWAY ENTRANCE TYPE 1

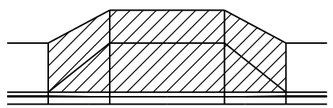

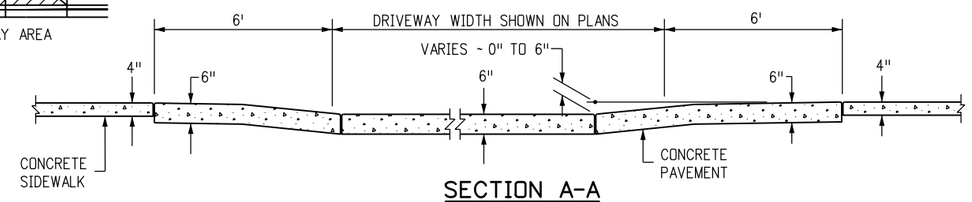

SECTION A-A

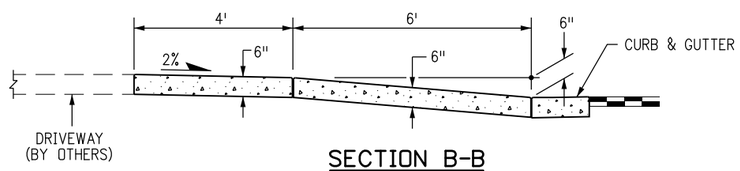

SECTION B-B

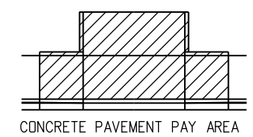

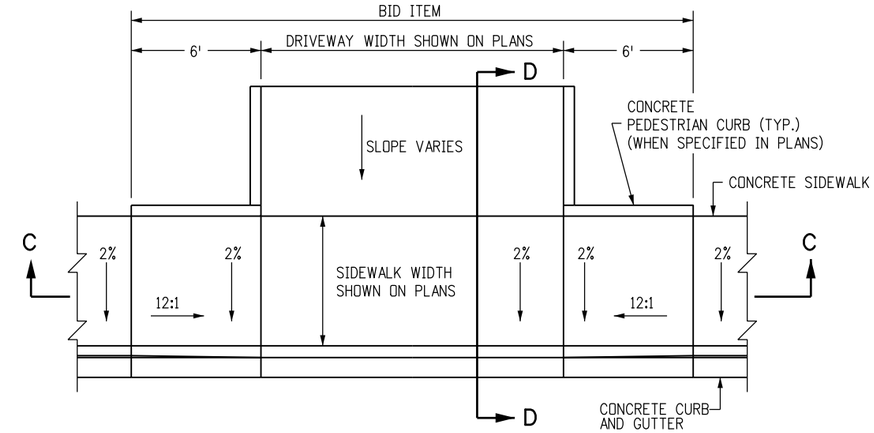

CONCRETE DRIVEWAY ENTRANCE TYPE 2

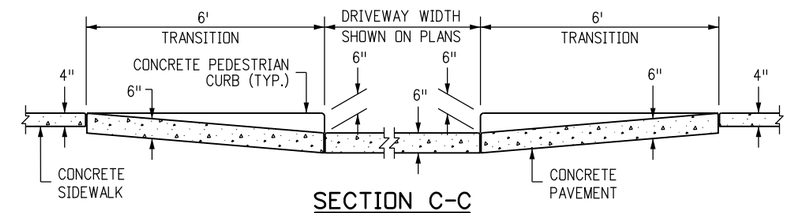

SECTION C-C

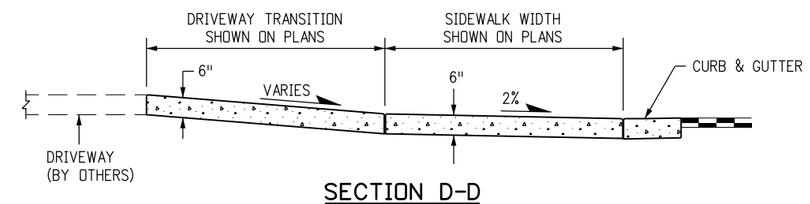

SECTION D-D

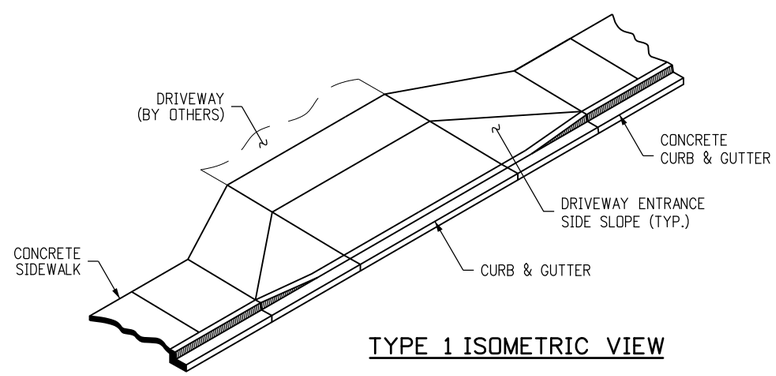

TYPE 1 ISOMETRIC VIEW

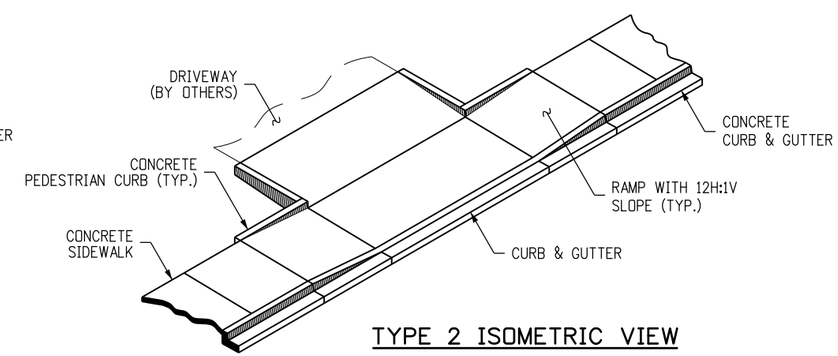

TYPE 2 ISOMETRIC VIEW

NOTES

1. DRAINAGE STRUCTURES, TRAFFIC SIGNAL EQUIPMENT, JUNCTION BOXES, AND OTHER OBSTRUCTIONS SHOULD NOT BE PLACED IN FRONT OF THE DRIVEWAY RAMP ACCESS AREAS.
2. FOR THE CURB AND GUTTER SHOWN, SEE PLANS FOR CURB TYPE.
3. RAMP SLOPES SHALL BE 12:1 OR FLATTER.
4. CONSTRUCTION OF THE CONCRETE PEDESTRIAN CURB SHALL BE INCLUDED IN THE BID PRICE OF THE CONCRETE PAVEMENT.

Computer File Information		Sheet Revisions	
Creation Date: 07/04/12 Initials: DD		Date:	Comments
Last Modification Date: 07/04/12 Initials: LTA	(R-X)		
Full Path: www.coloradodot.info/business/designsupport	(R-X)		
Drawing File Name: 609010304.dgn	(R-X)		
CAD Ver.: MicroStation V8 Scale: Not to Scale Units: English	(R-X)		

Colorado Department of Transportation
4201 East Arkansas Avenue
Denver, Colorado 80222
Phone: (303) 757-9083
Fax: (303) 757-9820
Project Development Branch DD/LTA

CURB, GUTTERS, AND SIDEWALKS

Issued By: Project Development Branch on July 4, 2012

STANDARD PLAN NO.

M-609-1

Sheet No. 3 of 4

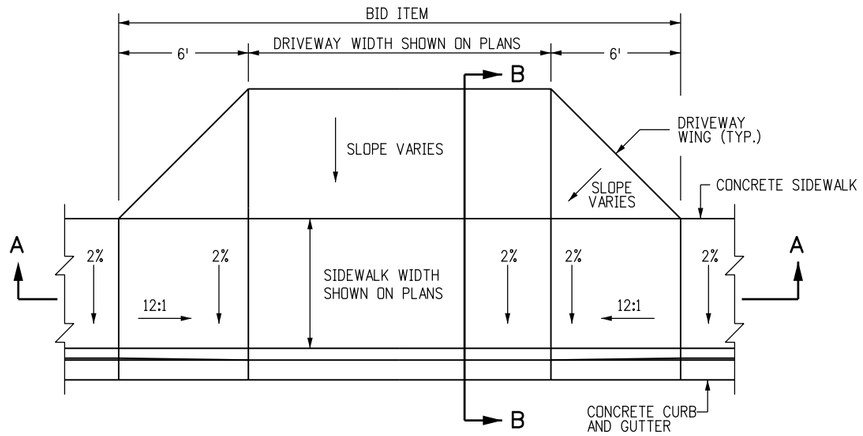

CONCRETE DRIVEWAY ENTRANCE TYPE 3

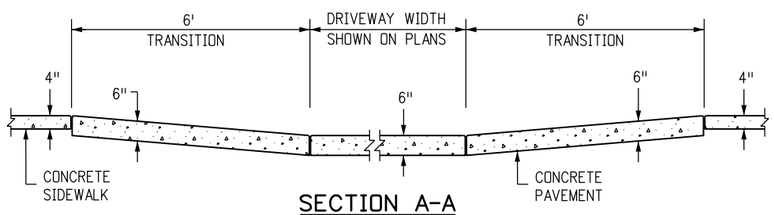

SECTION A-A

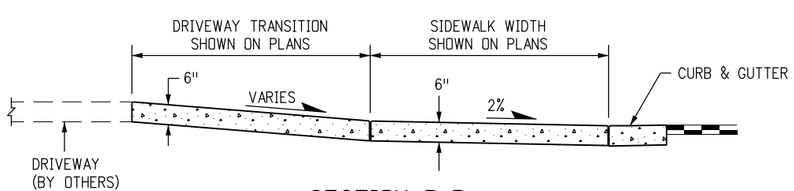

SECTION B-B

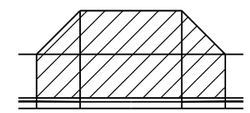

CONCRETE PAVEMENT PAY AREA

NOTES

1. DRAINAGE STRUCTURES, TRAFFIC SIGNAL EQUIPMENT, JUNCTION BOXES, AND OTHER OBSTRUCTIONS SHOULD NOT BE PLACED IN FRONT OF THE DRIVEWAY RAMP ACCESS AREAS.
2. FOR THE CURB AND GUTTER SHOWN, SEE PLANS FOR CURB TYPE.
3. RAMP SLOPES SHALL BE 12:1 OR FLATTER.

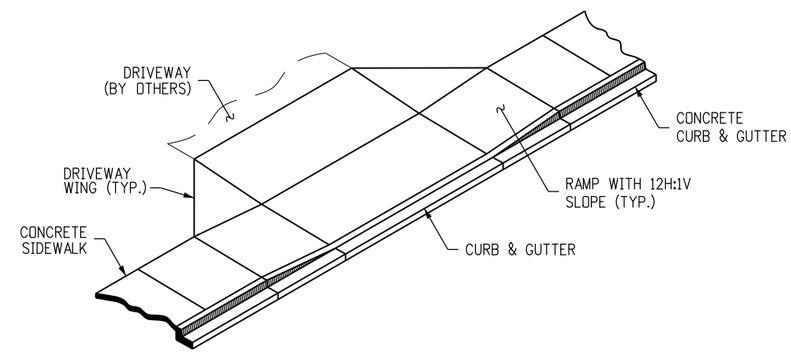

TYPE 3 ISOMETRIC VIEW

Computer File Information		Sheet Revisions	
Creation Date: 07/04/12 Initials: DD		Date:	Comments
Last Modification Date: 07/04/12 Initials: LTA	(R-X)		
Full Path: www.coloradodot.info/business/designsupport	(R-X)		
Drawing File Name: 609010404.dgn	(R-X)		
CAD Ver.: MicroStation V8 Scale: Not to Scale Units: English	(R-X)		

Colorado Department of Transportation
4201 East Arkansas Avenue
Denver, Colorado 80222
Phone: (303) 757-9083
Fax: (303) 757-9820
Project Development Branch DD/LTA

CURB, GUTTERS, AND SIDEWALKS

Issued By: Project Development Branch on July 4, 2012

STANDARD PLAN NO.

M-609-1

Sheet No. 4 of 4

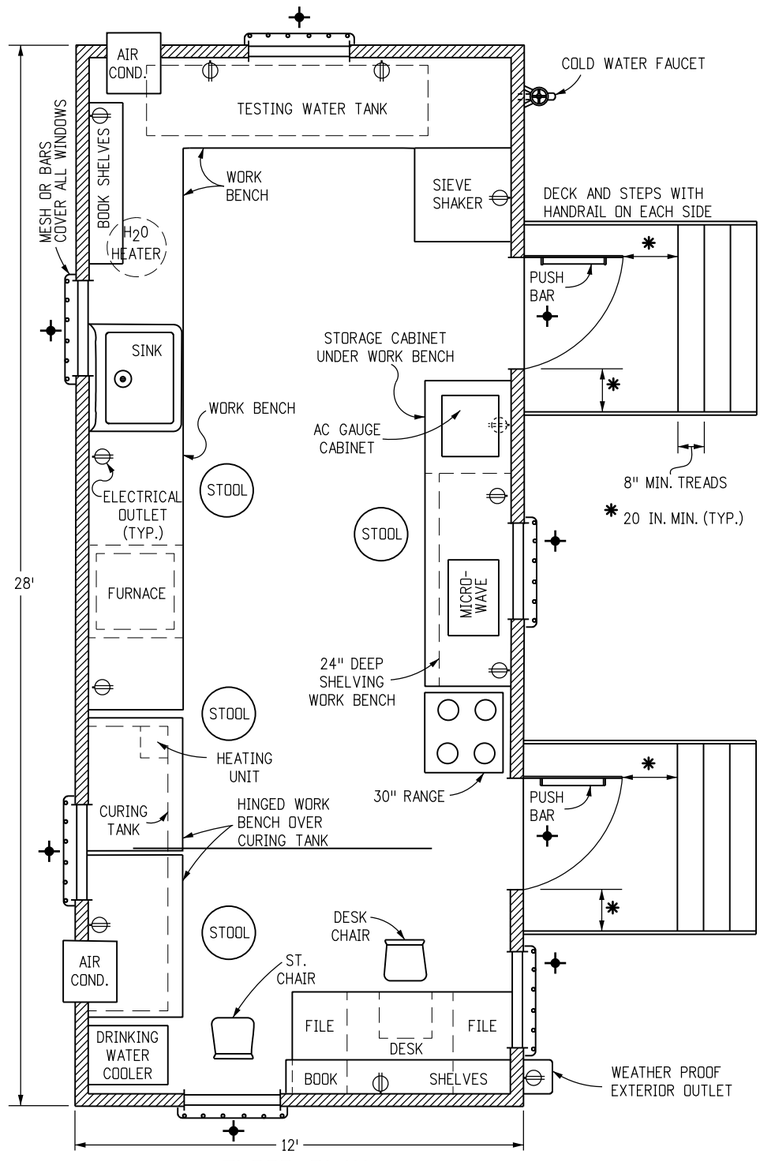

FLOOR PLAN

GENERAL NOTES

1. CLASS 2 FIELD LABORATORIES SHALL CONSIST OF A WEATHERPROOF, INSULATED, TEMPORARY OFFICE TYPE TRAILER, CONSTRUCTED TO THE UNIFORM BUILDING CODE SERIES, WITH FLOOR PLAN AND EQUIPMENT LAYOUT SIMILAR TO THE DRAWING ON THIS SHEET. IT SHALL MEET OR EXCEED THE FOLLOWING REQUIREMENTS.
2. **DIMENSIONS:** 28 FT. LONG x 12 FT. WIDE OUTSIDE, 7 FT.-6 IN. HEIGHT INSIDE.
3. **WINDOWS:** SIX, 30 IN x 27 IN., CAPABLE OF OPENING AND LOCKING.
4. **DOORS:** TWO, EQUIPPED WITH DEADBOLT LOCKS, 36 IN. x 80 IN., INSULATED STEEL WITH SMALL CLEAR GLASS WINDOW. EQUIPPED WITH HORIZONTAL PUSH BAR, HEAVY DUTY DOOR CLOSER, AND PULL HANDLE MOUNTED ABOVE PUSH BAR. EACH DOOR SHALL HAVE A SET OF STEPS WITH DECK, AND HANDRAILS. THE STEPS SHALL BE PLACED SO THE DECK CAN BE ACCESSED EITHER FROM THE SIDE OR FROM THE FRONT. THE DECK, RAILS, AND STEPS SHALL MEET OSHA REQUIREMENTS.
5. **FLOOR:** ADEQUATE INSULATION UNDER THE FLOOR. FLOOR COVERING SHALL BE SKID RESISTANT.
6. **HEATING:** FURNACE, 55,000 BTU, FORCED AIR TYPE.
7. **AIR CONDITIONING:** TWO, 8,300 BTU MINIMUM.
8. **ELECTRICAL:** WORK SHALL CONFORM TO THE NATIONAL ELECTRICAL CODE FOR 110/220 VOLTS, 60 HZ, APPLICATIONS AND PROVIDE RELIABLE UNIFORM POWER TO PROPERLY OPERATE ALL FIELD LABORATORY EQUIPMENT. ALL TRAILERS CONSTRUCTED AFTER JULY 1, 2006 SHALL HAVE AN APPROPRIATELY SIZED CIRCUIT BREAKER TO HANDLE THE LOAD OF ALL LABORATORY AND ENVIRONMENTAL EQUIPMENT OPERATING AT ONE TIME. PROVIDE A SEPARATE ELECTRICAL CIRCUIT TO SUPPLY POWER TO THE ASPHALT CONTENT GAUGE AND THE OUTLET IN THE STORAGE CABINET UNDER THE WORK BENCH.
9. **LIGHTING:** ADEQUATE FLUORESCENT LIGHTING DIRECTLY OVER ALL WORK BENCH AND DESK AREAS. THERE SHALL BE ONE 110 VOLT EXTERIOR PORCH LIGHT FIXTURE WITHIN 2 FT. OF EACH EXTERIOR DOOR.
10. **VENT FAN:** ONE, GENERAL VENTILATION WITH 800 CFM CAPACITY AND 2 SPEED SWITCH. MOUNTED IN THE ROOF OR AT TOP OF WALL NEAR THE RANGE.
11. **FURNITURE:** TWO, TWO-DRAWER, LEGAL SIZE FILE CABINETS BUILT INTO DESK AREA. DESK SHALL BE BUILT-IN WITH ONE CENTER DRAWER. ONE DESK CHAIR WITH ROLLERS, ONE STRAIGHT CHAIR, AND FOUR STOOLS FOR WORK AREA WITH HEIGHT COMPATIBLE WITH WORK BENCHES. ALL CHAIRS SHALL BE ERGONOMICALLY BUILT.
12. **BOOK SHELVES:** A MINIMUM OF 10 LINEAR FT. LONG BUILT OVER DESK AREA AND 8 LINEAR FT. LONG BUILT OVER WORK BENCH. ALL SHELVES SHALL BE 10 IN. DEEP. TOP SHELF SHALL BE AT LEAST 14 IN. BELOW CEILING.
13. **WORK BENCHES:** 30 IN. DEEP x 36 IN. HIGH WITH A DURABLE WORKING SURFACE SUCH AS FORMICA.
14. **STORAGE CABINETS:** TWO, ONE BUILT-IN UNDER THE WORK BENCH WITH A 28 IN. x 28 IN. LOCK EQUIPPED DOOR, WITH ELECTRICAL OUTLET INSIDE. ONE REMOVABLE, WITH OPEN BOTTOM, LOCK EQUIPPED TO SECURE CABINET TO TOP OF WORK BENCH, AND LARGE ENOUGH TO COVER A 22 IN. x 18 IN. x 18 IN. HIGH ASPHALT CONTENT (AC) GAUGE.
15. **SINK:** ONE, SINGLE TUB, STAINLESS STEEL, 25 IN. x 22 IN. x 6½ IN. EQUIPPED WITH SPRAY NOZZLE, ONE COMBINATION (MIXING) HOT AND COLD WATER FAUCET AND ONE SINGLE COLD WATER FAUCET. ALL FAUCETS SHALL BE EQUIPPED WITH STANDARD HOSE THREAD SPIGOTS. DRAIN SHALL HAVE NO TRAP.
16. **DRINKING WATER SUPPLY:** DRINKING WATER DISPENSED FROM AN ACCEPTABLE WATER COOLING DEVICE.
17. **TESTING WATER SUPPLY:** 300 GALLON WATER CAPACITY, IN ONE OR MORE TANKS LOCATED ALONG THE TRAILER END OR ALONG BOTH SIDES OF THE TRAILER END, VENTED WITH MEANS OF DETERMINING WATER LEVEL, WITH ONE PRESSURE PUMP, MINIMUM 30 PSI DELIVERY PRESSURE. TEN GALLON ELECTRIC WATER HEATER. ONE COLD WATER FAUCET WITH BACK FLOW PREVENTER LOCATED ON OUTSIDE OF TRAILER. WATER PIPES SHALL BE LOCATED SO THEY ARE UNEXPOSED AND PROTECTED FROM DAMAGE. WATER SHALL BE SUPPLIED BY THE CONTRACTOR. USE POTABLE WATER ONLY.
18. **TELEPHONES:** TWO TELEPHONES. TWO PRIVATE LINES (1FB) WITH TOUCH TONE SERVICE (IF AVAILABLE) FROM THE LOCAL CARRIER. ONE LINE SHALL BE SHARED BY THE TWO TELEPHONES. THE SECOND LINE SHALL BE SHARED BY A COMPUTER AND FACSIMILE MACHINE. THE CONTRACTOR SHALL PROVIDE AN EXCLUSION SWITCH (AB SWITCH) FOR THE COMPUTER AND FAX. TRAILER WIRING SHALL INCLUDE FOUR BOXES EQUIPPED WITH RJ-11 JACKS (TWO WIRE PAIRS PER JACK). TWO AT EACH END OF THE TRAILER. LOCATIONS WHERE PRIVATE LINE SERVICE IS NOT AVAILABLE, PROVIDE ONLY ONE LINE.
19. **FIRE EXTINGUISHER:** ONE, DRY CHEMICAL, 10 LBS. CLASS ABC, UNDERWRITERS LABORATORIES, INC. APPROVED.
20. **RANGE:** 30 IN. KITCHEN RANGE, ELECTRIC OR GAS, HAVING FOUR SURFACE BURNERS AND A 3.5 CU. FT. OVEN WITH REINFORCED OVEN RACKS.
21. **MICROWAVE OVEN:** ONE, 1.5 CU. FT. WITH AT LEAST FIVE POWER LEVELS AND A REVOLVING FLOOR OR ROTATING POWER SOURCE.
22. **SECURITY:** THIS SYMBOL ✦ ON THE FLOOR PLAN DENOTES AREAS ON THE TRAILER WHERE ADEQUATE PROTECTION AGAINST ILLEGAL ENTRY, VANDALISM AND THEFT SHALL BE PROVIDED.
23. **SIEVE SHAKER:** ONE MOTOR DRIVEN STANDARD PORTABLE SHAKER INCLUDING:
    A. A SAFETY SHIELD ON DRIVE BELT.
    B. AN ADJUSTABLE TIMED - ON/OFF SWITCH LOCATED NEAR THE SHAKER.
    C. ADAPTERS TO HANDLE EITHER 8 IN. OR 12 IN. SIEVES.

    THE SHAKER SHALL BE CAPABLE OF SHAKING A FULL SET OF 8 IN. SIEVES AS WELL AS 12 IN. SIEVES, AND SHALL BE MOUNTED 24 IN. ABOVE THE FLOOR IN A SOUND PROOF, INSULATED ENCLOSURE HAVING HINGED OPENINGS.

    THE SIEVE SHAKER SHALL BE A RO-TAP, ENDOCOTT FROM SOILTEST, SS-12R FROM GILSON OR APPROVED EQUAL. THE SHAKER SHALL BE SECURELY BOLTED TO A RIGID, STURDY SURFACE.
24. **ELECTRONIC BALANCE:** THE BALANCE SHALL COMPLY WITH ASSHTO M 231 FOR GENERAL PURPOSE, CLASS G2 BALANCES, AND THE FOLLOWING:
    A. POWER: 115 VAC
    B. MODEL: TOP LOADING
    C. CAPACITY: MINIMUM OF 35 LBS.
    D. READABILITY AND SENSITIVITY: 0.0005 LB.
    E. ACCURACY: 0.001 LB. OR 0.1%
    F. DISPLAY PANEL: SHALL BE EQUIPPED WITH THE FOLLOWING: LED DISPLAY, ON/OFF KEY, PRINT KEY, RE-ZERO KEY, WEIGHING MODE KEY, SAMPLE % KEY, SERIAL RS- 232C PORT, AND A CALIBRATION SWITCH.
    G. WEIGHING MODES: GRAMS, POUNDS, AND PERCENT OF TARGET MASS (WEIGHT).
    H. WEIGHING SURFACE DIMENSION: MINIMUM OF 9 IN. WIDE BY 12 IN. DEEP.
    I. BASE: SHALL HAVE ADJUSTABLE LEVELING FEET AND A LEVEL VIAL ATTACHED.

    THE BALANCE SHALL BE EQUIPPED WITH AN UNDERHOOK WEIGHING DEVICE AND ONE COPY OF THE OWNER'S MANUAL.
25. **RECORDING THERMOMETER:** RECORDING THERMOMETER FOR CURING TANKS SHALL BE EITHER ELECTRICAL OR MECHANICAL TYPE.
    A. THE ELECTRICAL RECORDING THERMOMETER SHALL BE EQUIPPED WITH THE FOLLOWING:
        (1) 120 VAC/60 Hz WITH A MINIMUM 3 FT. LONG POWER CORD.
        (2) MINIMUM 6 IN. DIAMETER CIRCULAR PAPER CHART WITH A BOX OF BLANK CHARTS.
        (3) A SELECTABLE TEMPERATURE SCALE WITH ONE SCALE THAT HAS A RANGE FROM 50° F. TO 120° F.
        (4) A SELECTABLE CHART SPEED WITH ONE SPEED OF 24 HOURS AND ONE SPEED OF 7 DAYS. THE SPEED ACCURACY SHALL BE ± 1.5%.
        (5) THE DISPLAY SHALL BE A MINIMUM 3 DIGIT LED WITH A MINIMUM DIGIT SIZE OF 0.5 IN.
        (6) THE TEMPERATURE ACCURACY OF THE MONITOR SHALL BE ± 1° F
        (7) THE MONITOR SHALL HAVE A CHART ADVANCE BUTTON, A TIME POINTER, A PEN ADJUST BUTTON, AND A TEMPERATURE ADJUST KNOB.

    THE RECORDING PEN SHALL BE AN INK TYPE WITH A SPARE PEN INCLUDED.

    THE TEMPERATURE PROBE SHALL BE SUBMERSIBLE TYPE J THERMOCOUPLE WITH A 15 FT. MINIMUM CORD LENGTH.

    B. THE MECHANICAL RECORDING THERMOMETER SHALL BE EQUIPPED WITH THE FOLLOWING:
        (1) MINIMUM 3 IN. DIAMETER PRESSURE SENSITIVE PAPER CHART WITH A BOX OF BLANK CHARTS.
        (2) THE STEM OF THE THERMOMETER SHALL BE A MINIMUM OF 12 IN. LONG.
        (3) THE THERMOMETER SHALL BE A KEY TYPE, WINDING MODEL CAPABLE OF 7 DAY, 24 HOUR RECORDING.
        (4) THE DRIVE MECHANISM SHALL BE CAPABLE OF OPERATING BEYOND ITS FULL RECORDING RANGE BY A MINIMUM OF 20%.
        (5) THE THERMOMETER SHALL BE CAPABLE OF OPERATING FROM 0° F TO 200° F.
        (6) THE CLOCK MECHANISM ACCURACY SHALL BE A MINIMUM OF 2% OF THE FULL-SCALE RANGE BEING USED.
        (7) THE RECORDING RANGE SHALL BE A MINIMUM OF 20° F TO 220° F.

    THE RECORDING THERMOMETER SHALL BE MOUNTED IN SUCH A WAY THAT A MINIMUM 8 IN. OF THE STEM IS IMMERSED IN THE CURING TANKS AND IS EASILY ACCESSIBLE TO CHANGE THE RECORDING TEMPERATURE CHARTS.
26. THE REQUIREMENTS LISTED HEREIN ARE INTENDED TO MEET THE NEEDS OF THE CDOT TESTING PERSONNEL CONCERNING TESTING FACILITIES. THERE IS NO INTENT TO SPECIFY ANY STRUCTURAL PORTIONS OF THE SUBJECT LABORATORY EXCEPT AS NEEDED TO SATISFACTORILY PERFORM THE REQUIRED TESTING OF MATERIALS.

THE GENERAL NOTES ARE CONTINUED ON SHEET 2.

Computer File Information		
Creation Date: 7/04/12	Initials: DD	
Last Modification Date: 7/04/12	Initials: LTA	(R-X)
Full Path: www.coloradodot.info/business/designsupport		(R-X)
Drawing File Name: 620020102.dgn		(R-X)
CAD Ver.: MicroStation V8 Scale: Not to Scale	Units: English	(R-X)

Sheet Revisions	
Date:	Comments

Colorado Department of Transportation
4201 East Arkansas Avenue
Denver, Colorado 80222
Phone: (303) 757-9083
Fax: (303) 757-9820
Project Development Branch DD/LTA

FIELD LABORATORY CLASS 2

Issued By: Project Development Branch July 4, 2012

STANDARD PLAN NO.
M-620-2
Sheet No. 1 of 2

GENERAL NOTES (CONTINUED FROM SHEET 1)

27. **FORCED AIR CONVECTION OVEN:** REQUIRED ON PROJECTS WITH 5,000 OR MORE TONS OF HMA OR WHEN SPECIFIED IN THE PLANS. THE FORCED AIR OVEN REPLACES THE RANGE. THE OVEN SHALL BE RATED TO AT LEAST 1500 WATTS INCLUDING:
    1. AT LEAST ONE BLOWER TO CIRCULATE AIR INSIDE WITHOUT DISTURBING FINE GRAINED SOILS PLACED IN THE OVEN.
    2. A MINIMUM INTERIOR CAPACITY OF 4.8 CUBIC FEET.
    3. AN EXHAUST CHAMBER ADAPTER TO CONNECT TO A 3 INCH PIPE WHICH SHALL BE VENTED TO THE OUTSIDE.
    4. AT LEAST TWO ADJUSTABLE SHELVES.
    5. AN OVER-TEMPERATURE PROTECTION DEVICE.
    6. AN ELECTRONIC CONTROL SYSTEM WITH DIGITAL TEMPERATURE READ-OUT AND DIGITAL TEMPERATURE SET POINTS TO PRECISELY READ AND SET THE OVEN TEMPERATURE.

    THE OVEN SHALL HAVE A TEMPERATURE RANGE FROM 104 °F TO 464 °F AND HAVE A UNIFORM TEMPERATURE OF ± 3 °F AT 230 °F.

    THE OVEN SHALL BE CAPABLE OF MAINTAINING A CONSTANT TEMPERATURE, ± 5 °F, THROUGHOUT ITS TEMPERATURE RANGE.

    THE OVEN HEATING ELEMENTS SHALL NOT BE ALLOWED TO OPERATE WITHOUT THE BLOWER.

    THE FIELD LABORATORY SHALL BE EQUIPPED WITH A SEPARATE ELECTRICAL CIRCUIT TO SUPPLY POWER TO THE FORCED CONVECTION OVEN.

    IN ADDITION TO THE ABOVE FORCED AIR CONVECTION OVEN, A HOT PLATE CONFORMING TO THE FOLLOWING SHALL BE PROVIDED:
    1. TWO BURNER, PORTABLE, ELECTRICAL "CAL-ROD" OR "RANGETTE" TYPE.
    2. AT LEAST ONE BURNER SHALL BE RATED A MINIMUM OF 800 WATTS.
    3. EACH HOT PLATE SHALL BE EQUIPPED WITH AN ON-OFF INDICATOR LIGHT.

28. **CURING TANK:** MINIMUM 95 GALLON CAPACITY WITH A CIRCULATING PUMP WITH A 120 GPH RATING. TANK CAPACITY WILL INCREASE FOR LARGE CONCRETE PROJECTS WHEN SPECIFIED IN THE PLANS.

GENERAL NOTES

1. CLASS 2 FIELD OFFICES SHALL CONSIST OF A WEATHERPROOF, INSULATED, TEMPORARY OFFICE TYPE TRAILER, BUILT TO THE UNIFORM BUILDING CODE SERIES OF CODES, WITH FLOOR PLAN AND EQUIPMENT LAYOUT SIMILAR TO THE DRAWING ON THIS SHEET. IT SHALL MEET OR EXCEED THE FOLLOWING REQUIREMENTS.
2. **DIMENSIONS:** 50 FT. LONG x 12 FT. WIDE OUTSIDE, 7 FT.-6 IN. HEIGHT INSIDE.
3. **WINDOWS:** A MINIMUM OF 6, WITH PROVISION FOR CROSS VENTILATION AND LOCKING.
4. **DOORS:** TWO INSIDE DOORS, MAY BE LOCATED EITHER TO ONE SIDE OR AT CENTER OF PARTITION. ONE CLOSET DOOR. TWO OUTSIDE DOORS SHALL BE REINFORCED AND HAVE DEADBOLT LOCKS. DECK, STEPS, AND HANDRAILS AT EACH OUTER DOOR. THE STEPS SHALL BE PLACED SO THE DECK CAN BE ACCESSED EITHER FROM THE SIDE OR FROM THE FRONT. THE DECK, RAILS, AND STEPS SHALL MEET OSHA REQUIREMENTS.
5. **HEATING & AIR CONDITIONING:** THREE TON CAPACITY AIR CONDITIONING AND 80,000 BTU CAPACITY HEATING, CONNECTED TO DUCTING & THERMOSTAT CONTROLLED.
6. **ELECTRICAL:** WORK SHALL CONFORM TO THE NATIONAL ELECTRICAL CODE FOR 110/220 VOLTS, 60 Hz, APPLICATIONS AND PROVIDE RELIABLE UNIFORM POWER TO PROPERLY OPERATE ALL FIELD OFFICE EQUIPMENT.
7. **LIGHTING:** ADEQUATE FLUORESCENT LIGHTING OVER ALL DRAFTING TABLES AND DESK AREAS. THERE SHALL BE ONE 110 VOLT EXTERIOR PORCH LIGHT FIXTURE WITHIN 2 FT. OF EACH EXTERIOR DOOR.
8. **DESKS:** ONE 30 IN. x FULL INSIDE WIDTH x 30 IN. HIGH AT EACH END OF THE TRAILER, SUPPORTED BY A LEGAL SIZE 2 DRAWER METAL FILE CENTER PEDESTAL. EACH DESK TOP SHALL HAVE AN OVERHEAD SHELF AND TWO PEN DRAWERS.
9. **DRAFTING TABLE:** ONE 38 IN. x 96 IN. TABLE, SLOPED 12:1 TO 37 IN. HEIGHT AT FRONT EDGE OR WITH PROVISION FOR ADJUSTING THE SLOPE.
10. **WORK TABLE:** ONE 72 IN. x 36 IN. TABLE. THE TOP OF THE TABLE SHALL BE FREE OF ALL SCRATCHES, CHIPS, AND DENTS.
11. **OFFICE DESK:** ONE 72 IN. x 36 IN. DESK WITH SIX DRAWERS AND ONE CENTER PEN DRAWER. THE TOP OF THE DESK SHALL BE FREE OF ALL SCRATCHES, CHIPS, AND DENTS.
12. **FURNITURE:** EIGHT CHAIRS WITH ROLLERS AND TWO DRAFTING STOOLS. EACH OF APPROPRIATE HEIGHT. ONE WORK TABLE OR DESK. ALL CHAIRS SHALL BE ERGONOMICALLY BUILT.
13. **PLAN STORAGE:** A PLAN RACK OR FILE FOR FULL SIZE PLANS.
14. **CLOSET:** A LOCKED STORAGE AREA OF 15 SQ. FT.
15. **DRINKING WATER SUPPLY:** DRINKING WATER DISPENSED FROM AN ACCEPTABLE WATER COOLING DEVICE.
16. **TELEPHONES:** THREE, 2-LINE TELEPHONES. FOUR PRIVATE LINES (1FB) WITH TOUCH TONE SERVICE. TWO LINES ARE FOR TELEPHONE SERVICES, WITH ROLL-OVER CAPABILITY FOR THE THREE TELEPHONES. ONE LINE SHALL BE USED FOR THE COMPUTER, AND ONE LINE SHALL BE USED FOR THE FACSIMILE MACHINE. TRAILER WIRING SHALL INCLUDE 9 RJ-11 JACKS, ONE JACK EACH FOR A TWO-LINE TELEPHONE, A COMPUTER LINE, AND A FACSIMILE MACHINE LINE AT EACH END OF THE OFFICE, AND IN THE CENTER AREA OF THE OFFICE.
17. **FIRE EXTINGUISHER:** TWO, DRY CHEMICAL, 10 LBS. CLASS ABC, UNDERWRITERS LABORATORIES, INC. APPROVED.
18. **SECURITY:** THIS SYMBOL ✚ ON THE FLOOR PLAN DENOTES AREAS ON THE TRAILER WHERE ADEQUATE PROTECTION AGAINST ILLEGAL ENTRY, VANDALISM AND THEFT SHALL BE PROVIDED.

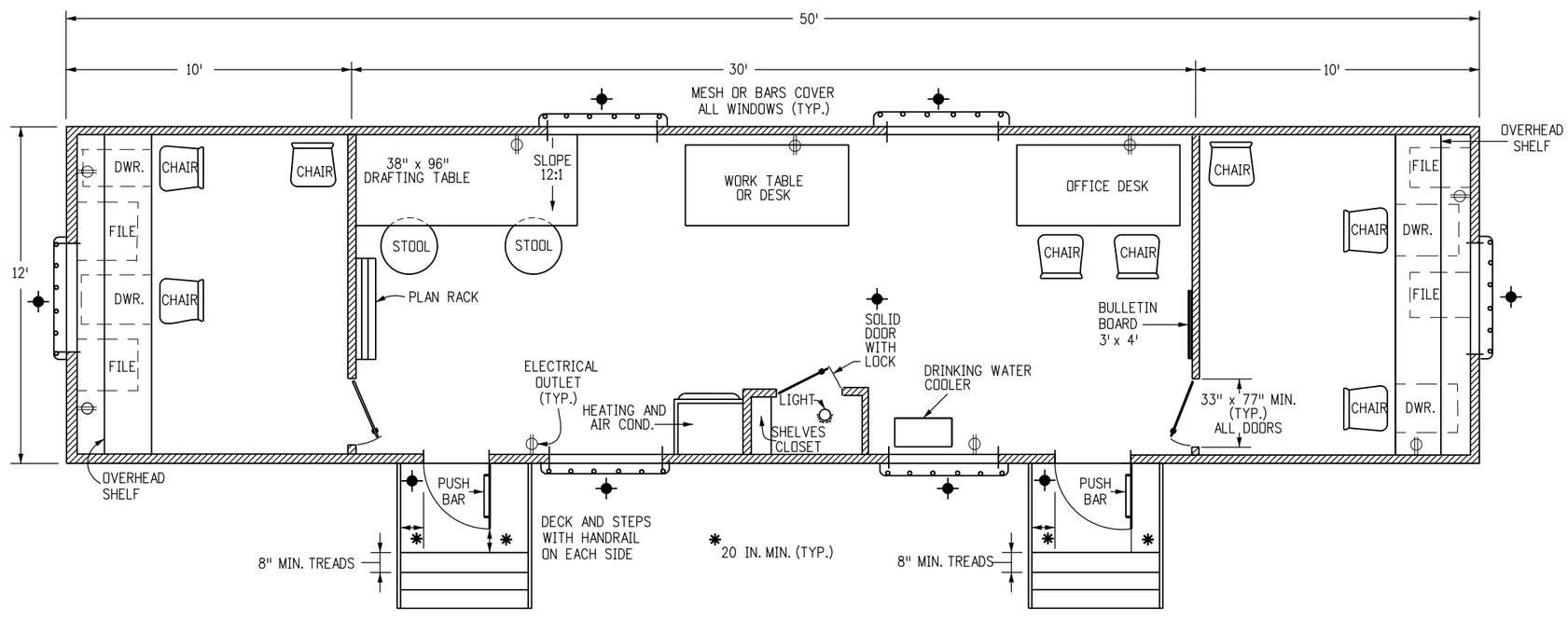

FLOOR PLAN

Computer File Information		Sheet Revisions	
Creation Date: 7/04/12 Initials: DD		Date:	Comments
Last Modification Date: 7/04/12 Initials: LTA	(R-X)		
Full Path: www.coloradodot.info/business/designsupport	(R-X)		
Drawing File Name: 6200120101.dgn	(R-X)		
CAD Ver.: MicroStation V8 Scale: Not to Scale Units: English	(R-X)		

Colorado Department of Transportation
4201 East Arkansas Avenue
Denver, Colorado 80222
Phone: (303) 757-9083
Fax: (303) 757-9820
Project Development Branch DD/LTA

FIELD OFFICE CLASS 2

Issued By: Project Development Branch July 4, 2012

STANDARD PLAN NO.

M-620-12

Sheet No. 1 of 1

GENERAL NOTES

1. ALL CONSTRUCTION ZONE TRAFFIC CONTROL DEVICES, INCLUDING BUT NOT LIMITED TO BARRICADES, SIGNS, ARROW PANELS, FLASHING BEACON (PORTABLE), AND CHANNELIZING DEVICES, SHALL BE FURNISHED, INSTALLED, MAINTAINED (INCLUDING WASHING), REPLACED IF DAMAGED, REMOVED WHEN TEMPORARILY NOT IN USE AND RETURNED WHEN REQUIRED, RESET AS NECESSARY DURING THE PROGRESS OF CONSTRUCTION, AND REMOVED ENTIRELY WHEN THE PROJECT IS COMPLETED. ALL DEVICES SHALL MEET THE REQUIREMENTS OF THE LATEST EDITION OF THE ATSSA "QUALITY GUIDELINES FOR TEMPORARY TRAFFIC CONTROL DEVICES & FEATURES".

2. WORK ON THE PROJECT SHALL NOT BE STARTED UNTIL ALL REQUIRED TRAFFIC CONTROL DEVICES ARE IN PLACE, AND APPROVED BY THE ENGINEER.

3. WHEN SPEED LIMIT REDUCTION IS REQUIRED, SUCH REDUCTION SHALL BE IN ACCORDANCE WITH CDOT FORM 568, "AUTHORIZATION AND DECLARATION OF TEMPORARY SPEED LIMITS."

   WHEN A CHANGE IN AN EXISTING SPEED LIMIT IS REQUIRED, THE R2-1 SIGNS, SHOWN ON THE SCHEDULE OF CONSTRUCTION TRAFFIC CONTROL DEVICES, SHOULD BE INSTALLED AT THE LOCATIONS SHOWN ON THE TYPICAL CASES BY R2-1 (OPTIONAL) SIGNS.

   AN ADVISORY SPEED PLATE (W13-1P) MAY BE USED WITH A WARNING SIGN WHEN THE MAXIMUM RECOMMENDED SPEED FOR CONDITION NAMED IS LOWER THAN THE POSTED SPEED LIMIT.

   THE REGULATORY OR ADVISORY SPEED REDUCTION DISPLAYED SHALL NOT EXCEED 15 MPH PER SIGN INSTALLATION.

4. ANY TRAFFIC CONTROL DEVICE THAT IS DAMAGED, WEATHERED, WORN, OR OTHERWISE DEEMED UNACCEPTABLE BY THE ENGINEER, SHALL BE REPLACED.

5. CONTRACTOR AND PERSONAL VEHICLE PARKING IS PROHIBITED WITHIN THE RIGHT-OF-WAY UNLESS DESIGNATED ON THE PLANS, OR APPROVED BY THE ENGINEER.

6. CONSTRUCTION TRAFFIC SIGNS SHALL BE MEASURED BY THE FOLLOWING SIZES AND DESCRIPTIONS:

PANEL SIZE A	0.01 TO 9.00 SQ. FT. (INCLUDING TYPE 1 AND TYPE 2 BARRICADES).
PANEL SIZE B	9.01 TO 16.00 SQ. FT.
PANEL SIZE C	GREATER THAN 16 SQ. FT.

   CONSTRUCTION TRAFFIC SIGN (SPECIAL), SQ. FT., MAY BE USED FOR SOME PROJECT SPECIFIC INFORMATION SIGNS.

   FOR DETAILED DIMENSIONS OF SIGNS WITH SIGN CODE NUMBERS, SEE "STANDARD HIGHWAY SIGNS" AND THE "COLORADO SUPPLEMENT" THERETO. SIGN LAYOUTS FOR OTHER SIGNS WILL BE FURNISHED IN THE PLANS, TRANSMITTED TO THE ENGINEER AFTER AWARD, OR MAY BE AVAILABLE UPON REQUEST.

   W20-5 WARNING SIGNS SHALL BE FURNISHED WITH EXCHANGEABLE PLAQUES READING "RIGHT", "LEFT", "CENTER", "RIGHT 2", ETC. AT NO ADDITIONAL COST.

7. ALL WARNING AND REGULATORY SIGNS SHALL BE POSTED ON BOTH SIDES OF THE ROADWAY ON DIVIDED HIGHWAYS, MULTI-LANE RAMPS, ONE-WAY STREETS, AND AS DIRECTED BY THE ENGINEER, EXCEPT WHERE ONLY ONE SHOULDER IS CLOSED (EX: CASE 11 ON SHEET 7).

8. ADDITIONAL TRAFFIC CONTROL DEVICES ADDRESSING FLAGGING, SPEED REDUCTION, ETC. WILL BE NECESSARY FOR SET-UP AND TAKE-DOWN OF MOST CASE APPLICATIONS; DAILY WORK SITE ACCESS; AND PAVEMENT MARKING REMOVAL AND INSTALLATION OPERATIONS.

9. BASED ON SIGHT DISTANCE AND OTHER CONSIDERATIONS, THE FINAL LOCATIONS OF SIGNS ARE SUBJECT TO APPROVAL OF THE ENGINEER.

10. IF CONSTRUCTION RELATED TRAFFIC CONGESTION BACKS UP BEYOND THE INSTALLED ADVANCE SIGN SEQUENCE, ADDITIONAL ADVANCE SIGNING SHALL BE PLACED BEYOND THE CONGESTION.

11. ALL SIGN MATERIAL SHALL BE SOUND AND DURABLE TO THE DEGREE NECESSARY FOR MAINTAINING EFFECTIVE AND NEAT APPEARING TRAFFIC CONTROLS, AND:

    a. SIGN PANELS MAY BE FABRICATED FROM PLYWOOD, STEEL, ALUMINUM, OR OTHER SUITABLE MATERIAL.
    b. REFLECTIVE SHEETING SHALL CONFORM TO ASTM D4956. THE TYPE SHALL BE AS DESCRIBED IN THE STANDARD SPECIFICATIONS AND/OR AS SHOWN ON THE PLANS.
    c. SYMBOLS AND LEGEND SHALL BE OF GOOD WORKMANSHIP (UNEVEN OR HAND LETTERING WILL NOT BE ACCEPTED).
    d. PORTABLE OR TEMPORARY MOUNTING SHALL NOT BE CONSTRUCTED OR WEIGHTED BY ANY METHOD OR MATERIAL THAT MAKES THEM HAZARDOUS TO TRAFFIC.
    e. CERTAIN POST SIZES AND SHAPES REQUIRE A "BREAK-AWAY" DEVICE. SEE THE APPLICABLE STANDARD PLAN. OTHER POST DESIGNS OR SYSTEMS REQUIRE THE SUBMITTAL OF AN FHWA LETTER OF ACCEPTANCE TO THE ENGINEER, AND MUST BE APPROVED BY THE ENGINEER PRIOR TO THEIR USE.

12. ALL CONSTRUCTION SIGN PLACEMENT SHALL BE IN ACCORDANCE WITH STANDARD PLAN "TYPICAL GROUND SIGN PLACEMENT" UNLESS OTHERWISE APPROVED.

    SIGNS APPROVED TO BE MOUNTED ON PORTABLE SUPPORTS, OR APPROPRIATE SIGNS MOUNTED ON BARRICADES, MAY BE AT LOWER HEIGHTS, BUT THE BOTTOM OF THE SIGNS SHALL NOT BE LESS THAN ONE FOOT ABOVE THE PAVEMENT ELEVATION.

13. SIGNS MOUNTED ON THE MEDIAN OF DIVIDED HIGHWAYS WHERE MEDIAN BARRIER IS IN PLACE MAY BE MOUNTED ON THE BARRIER WITH A SADDLE TYPE BRACKET. IF THE BRACKET ALLOWS THE SIGN PANEL TO BE TURNED PARALLEL TO THE ROADWAY, THE SIGN MAY REMAIN IN PLACE WHEN NOT APPLICABLE, BUT LAYING THE SIGN PANEL DOWN IN A HORIZONTAL POSITION IS NOT PERMITTED.

14. TRAFFIC CONES SHALL BE AT LEAST 28 INCHES IN HEIGHT. HOWEVER, THE MINIMUM SIZE SHALL BE 36 INCHES WHEN THEY ARE USED ON FREEWAYS AND EXPRESSWAYS, OR DURING NIGHT TIME WORKING HOURS. THEY SHOULD ALSO BE 36 INCHES WHEN USED ON OTHER HIGH SPEED ROADWAYS (45 MPH OR MORE) WITH AN ADT OF 6,000 OR MORE.

15. TYPE 1 BARRICADES SHALL NOT BE USED ON FREEWAYS, EXPRESSWAYS, OR OTHER HIGH SPEED ROADWAYS (55 MPH OR MORE).

16. WHEN TWO-WAY TRAFFIC IS PLACED ON ONE ROADWAY OF A NORMALLY DIVIDED HIGHWAY, OPPOSING TRAFFIC SHALL BE SEPARATED EITHER WITH CONCRETE BARRIER (TEMPORARY), OR WITH CHANNELIZING DEVICES APPROVED FOR THIS APPLICATION, THROUGHOUT THE LENGTH OF TWO-WAY OPERATION. THE TRANSITION ZONES SHALL HAVE CONCRETE BARRIER (TEMPORARY). THE BARRIER SHALL BE TIED TO AN EXISTING STRUCTURE OR GUARD RAIL, FLARED OR EXTENDED, TO MEET CLEAR ZONE REQUIREMENTS, OR FITTED WITH AN IMPACT ATTENUATION DEVICE.

17. CHANNELIZING DEVICE SPACING, IN FEET, SHALL BE AS FOLLOWS:
    a. FOR TAPERS AND TRANSITIONS, SPACING EQUALS THE NUMERICAL VALUE OF THE SPEED LIMIT. (e.g. 45 MPH = 45 FEET)
    b. FOR TANGENTS ALONG THE BUFFER SPACE OR WORK AREA, SPACING MAY NOT BE GREATER THAN TWO TIMES THE SPEED LIMIT. (e.g. 50 MPH = 50 FEET TO 100 FEET MAXIMUM)

18. FOR DETAILS ON BARRICADES, CONCRETE BARRIER (TEMPORARY), VERTICAL PANELS, AND FLASHING BEACON (PORTABLE), SEE THE APPLICABLE STANDARD PLANS.

19. FLOOD LIGHTS SHALL BE USED TO ILLUMINATE FLAGGER STATIONS DURING THE HOURS OF DARKNESS UNLESS OTHERWISE APPROVED. A TYPICAL LIGHT SHOULD PROVIDE THE FOLLOWING: A FULLY DIRECTIONAL SWIVEL MOUNT QUARTZ LIGHT SOURCE (500 WATT MINIMUM), SELF-SUPPORTING STAND WITH VARIABLE LIGHT HEIGHT FROM A MINIMUM OF EIGHT FEET ABOVE THE ROADWAY, AND A POWER SOURCE. IT SHALL ILLUMINATE THE STATION AREA AND A FLAGGER ESCAPE PATH, BUT SHALL NOT PRESENT ANY GLARE TO TRAFFIC.

20. FOR TEMPORARY PAVEMENT MARKINGS AND CONTROL POINTS FOR INSTALLING THOSE PAVEMENT MARKINGS FOR UNDIVIDED ROADWAYS THAT ARE BEING CONSTRUCTED UNDER TRAFFIC, FULL COMPLIANCE CENTER LINE, LANE LINE, AND EDGE LINE TEMPORARY MARKINGS SHALL BE IN PLACE AT THE END OF EACH WORK DAY IN ACCORDANCE WITH SECTION 627.03(d)2.

    FOR ADDITIONAL PAVEMENT MARKING DETAILS, SEE STANDARD PLAN "TYPICAL PAVEMENT MARKINGS".

21. BUFFER SPACE IS OPTIONAL. NEED MUST BE DETERMINED ON A PROJECT OR SITE SPECIFIC BASIS AS DIRECTED BY THE ENGINEER. WHEN A BUFFER SPACE IS USED, DIMENSIONS AND/OR DEVICES USED ARE TO BE INCORPORATED IN THE TRAFFIC CONTROL PLAN (TCP) OR THE CONTRACTOR'S METHOD OF HANDLING TRAFFIC (MHT).

22. ADDITIONAL VMS SIGNAGE SHOULD BE CONSIDERED AT LEAST A MILE IN ADVANCE OF THE SIGNING SHOWN IN THE DETAIL FOR ANY LANE CLOSURES ON INTERSTATE AND OTHER HIGH SPEED FACILITIES ESPECIALLY WHEN THE LEVEL OF SERVICE IS SIGNIFICANTLY REDUCED AS A RESULT OF CONSTRUCTION. THE LEGENDS SHOULD BE CHANGED TO ADVISE MOTORISTS OF UPCOMING TRAFFIC CONDITIONS AND TO ALERT THEM OF UPCOMING LANE USAGE.

    ADDITIONAL ADVANCE WARNING SIGNAGE IS ENCOURAGED IN ALL CASES WHERE TRAFFIC VOLUMES AND SPEEDS ARE HIGH AND/OR WHERE THERE ARE INFREQUENT EXITS. ADDITIONAL SIGNAGE IS ALSO ENCOURAGED IN LOCATIONS WHERE DRIVERS' LINE OF SIGHT TO ADVANCE WARNING SIGNS IS OBSTRUCTED.

23. WHEN ARROW BOARDS ARE USED TO CLOSE MULTIPLE LANES, A SEPARATE ARROW BOARD SHALL BE USED FOR EACH CLOSED LANE.

    IF ARROW BOARDS ARE USED FOR SHOULDER WORK, BLOCKING THE SHOULDER, FOR ROADSIDE WORK NEAR THE SHOULDER, OR FOR TEMPORARILY CLOSING ONE LANE ON A TWO-LANE, TWO-WAY ROADWAY, USE THE ARROW BOARDS ONLY IN THE CAUTION MODE.

24. RAISED PAVEMENT MARKERS MAY BE USED TO SUPPLEMENT TEMPORARY STRIPING DURING NON-SNOW PERIODS. THEIR USE IS ENCOURAGED ON HIGHER SPEED FACILITIES WHEN TRAFFIC IS BEING DIVERTED FROM ITS USUAL COURSE.

25. THE TYPICAL CASES DEPICTED IN THIS STANDARD REFLECT THE MINIMUM REQUIREMENTS, UNLESS AS OTHERWISE DIRECTED BY THE PROJECT PLANS AND SPECIFICATIONS, AND/OR THE PROJECT ENGINEER.

26. A SIGNIFICANT PROJECT IS DEFINED AS ONE THAT, ALONE OR IN COMBINATION WITH OTHER CONCURRENT PROJECTS NEARBY, IS ANTICIPATED TO CAUSE SUSTAINED WORK ZONE IMPACTS AT A LOCATION FOR THREE OR MORE CONSECUTIVE DAYS WITH EITHER INTERMITTENT OR CONTINUOUS LANE CLOSURES.

Sheet Revisions

	Date:	Comments
R-1	02/06/13	SHEET 13 - UPDATE TO 2009 MUTCD STD
R-2	02/26/13	SHEET 1 - UPDATE TO NOTE 1
R-3	02/27/13	SHEET 4 - UPDATE TAPER TO MUTCD STD
R-4	07/26/13	SHTS 9, 10, 15 & 20 - CORRECTED SIGN CODE DESIGNATION
R-5	**03/27/14**	SHTS 17 & 18 - UPDATED SIGNS AND TMA'S
R-6	**07/22/14**	SHEET 1 - UPDATE TO NOTE 20
R-7	**12/8/14**	SHEETS 17 TO 24 - ADDED AND RENUMBERED SHEET 22 - SIGN CODE UPDATE, W5-4D & W21-5a

Computer File Information

Creation Date: 07/04/12	Initials: KEN
Last Modification Date: 12/8/14	Initials: KEN
Full Path: www.coloradodot.info/library/traffic/traffic-s-standard-plans	
Drawing File Name: S-630-01_1of24.dgn	
CAD Ver.: MicroStation V8 Scale: Not to Scale	Units: English

Colorado Department of Transportation
4201 East Arkansas Avenue
Denver, Colorado 80222
Phone: (303) 757-9543
Fax: (303) 757-9219
Safety & Traffic Engineering Branch KCM/KEN

TRAFFIC CONTROLS FOR HIGHWAY CONSTRUCTION

Issued By: Safety & Traffic Engineering Branch July 4, 2012

STANDARD PLAN NO.

S-630-1

Sheet No. 1 of 24

INDEX TO TYPICAL WORK ZONE CASES

TYPICAL CASE DESCRIPTION	CASE NO.	SHEET NO.
CLOSURE OF ONE ROADWAY, 4-LANE HIGHWAY	1	3
CLOSURE OF HALF OF 4-LANE UNDIVIDED HIGHWAY	2	4
ROAD CLOSURE, USE OF ADJACENT SHOULDERS	3	
ROAD CLOSURE, BYPASS DETOUR PROVIDED	4	5
LANE #1 CLOSURE, MULTI-LANE FREEWAY	5	
LANE #2 CLOSURE, MULTI-LANE FREEWAY	6	6
LANE #3 CLOSURE, MULTI-LANE FREEWAY	7	
LANE #4 CLOSURE, MULTI-LANE FREEWAY	8	
CENTER LANE CLOSURE - MULTI-LANE FREEWAY	9	7
ONE LANE CLOSE - 4-LANE DIVIDED HIGHWAY	10	
SHOULDER WORK - FREEWAY/EXPRESSWAY	11	
TRAFFIC CONTROL ON FREEWAY NEAR AN OFF-RAMP	12	8
TRAFFIC CONTROL ON FREEWAY BEFORE AN ON-RAMP	13	
TRAFFIC CONTROL ON FREEWAY ALLOWING ACCESS FROM ON-RAMP	14	
BLASTING ZONE	15	9
RAMP CONSTRUCTION WHERE PARTIAL RAMP IS CLOSED	16	
LANE CLOSURE, 2-LANE HIGHWAY, AT CURVE	17	
TRAFFIC CONTROL AROUND A WORK AREA NEAR AN INTERSECTION, ONE LANE CLOSED	18	10
TRAFFIC CONTROL AROUND A WORK AREA NEAR AN INTERSECTION	19	
TYPICAL SIGNING FOR ROAD CLOSURE	20	
FULL CLOSURE, MULTI-LANE FREEWAY	21	11
CONTINUOUS LANE RAMP CLOSURE, MULTI-LANE FREEWAY	22	
SIMPLE RAMP CLOSURE, MULTI-LANE FREEWAY	23	
"FINES DOUBLE IN WORK ZONE" SIGNING (WITH SPEED REDUCTION)	24	12
SHIFTING OF ONE ROADWAY ON 4-LANE DIVIDED HIGHWAY	25	13
SHOULDER WORK - FREEWAY/EXPRESSWAY w/ 65 MPH SPEED LIMIT	26	14
SHOULDER WORK - FREEWAY/EXPRESSWAY w/ 75 MPH SPEED LIMIT	27	
ROCK SCALING - ROAD CLOSURE, 4-LANE DIVIDED HIGHWAY	28	15

TYPICAL CASE DESCRIPTION	CASE NO.	SHEET NO.
LATE MERGING - ONE LANE CLOSED, 4-LANE DIVIDED HIGHWAY	29	16
MOBILE PAVEMENT MARKING ZONE, MOBILE SHOULDER CLOSURE ON 2-LANE UNDIVIDED HIGHWAY	30	17
MOBILE PAVEMENT MARKING ZONE, CENTERLINE STRIPING ON 2-LANE UNDIVIDED HIGHWAY	31	
MOBILE PAVEMENT MARKING ZONE, LANE LINE STRIPING - CENTER LANE OPERATIONS ON MULTI-LANE DIVIDED HIGHWAY	32	18
MOBILE PAVEMENT MARKING ZONE, MOBILE RAMP CLOSURE - EXPRESSWAY/FREEWAY	33	
MOBILE OPERATION OF LANE CLOSURE OF MULTI-LANE HIGHWAY (NOT FOR USE ON FREEWAYS)	34	19
MOBILE OPERATION OF LANE CLOSURE OF MULTI-LANE HIGHWAY	35	

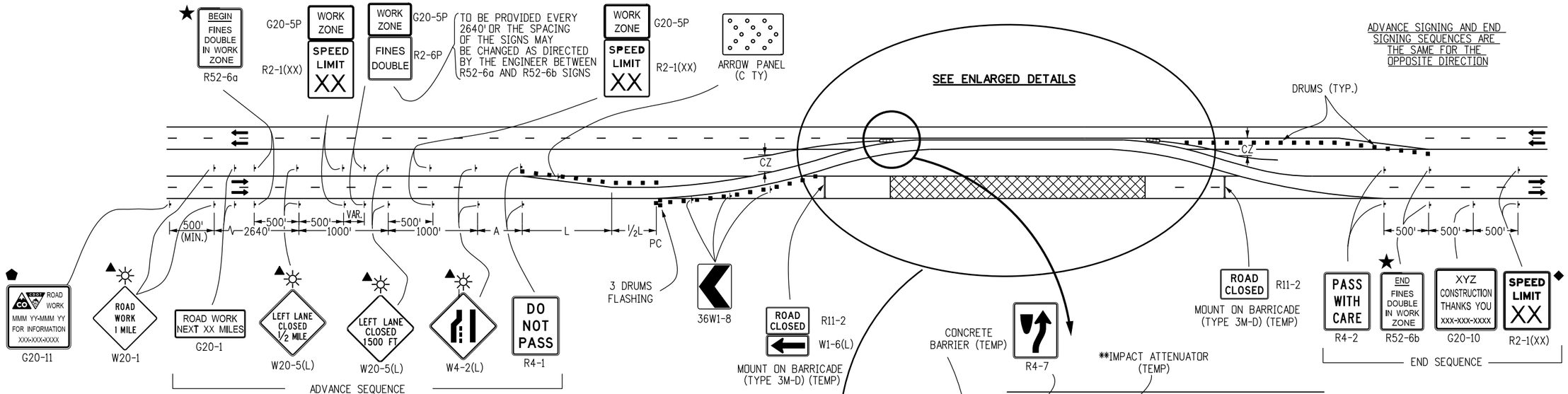

LEGEND

- ▪ CHANNELIZING DEVICE: FOR TYPE OF DEVICE TO BE USED, SEE SCHEDULE OF TRAFFIC CONTROL DEVICES INCLUDED IN THE PLANS. DRUMS OR VERTICAL PANELS SHALL BE USED TO DELINEATE THE LANE CLOSURE TAPER.
- TYPE III BARRICADE
- CONCRETE BARRIER (TEMPORARY)
- FLAGGER
- DIRECTION OF TRAVEL
- WORK AREA
- L TRANSITION TAPER LENGTH:
  - L = MINIMUM LENGTH OF TAPER
  - SPEED 45 MPH OR MORE: $L = S \times W$
  - SPEED 40 MPH OR LESS: $L = \frac{WS^2}{60}$
  - S = NUMERICAL VALUE OF SPEED LIMIT OR 85 PERCENTILE SPEED
  - W = WIDTH OF OFFSET
- ADVANCE WARNING FLASHING OR SEQUENCING ARROW PANEL
- A = 100' (URBAN LOW SPEED)
  - 350' (URBAN HIGH SPEED)
  - 500' (RURAL)
  - 1,000' (EXPRESSWAY / FREEWAY)
- CZ CLEAR ZONE (SEE GENERAL NOTE 16 ON SHEET 1).
- ▲ THESE DEVICES ARE OPTIONAL. THEIR NEED SHALL BE DETERMINED BY DETOUR DESIGN AND/OR SCOPE OF CONSTRUCTION ACTIVITY, AND ARE REQUIRED WHEN THEY ARE INCLUDED IN THE SCHEDULE OF CONSTRUCTION CONTROL DEVICES.
- VAR. BUFFER SPACE (SEE GENERAL NOTE 21 ON SHEET 1).
- IMPACT ATTENUATOR AS DETAILED ON THE PLANS
- FLASHING BEACON

◆ THESE DEVICES ARE NOT OPTIONAL IF THE POSTED SPEED LIMIT IN THE WORK ZONE IS REDUCED.

* THESE ITEMS ARE NOT REQUIRED WHEN CONTINUOUS CONCRETE BARRIER IS USED FOR CHANNELIZATION.

** SEE GENERAL NOTE 16 ON SHEET 1.

⬟ G20-11 SIGN IS REQUIRED IF SECTION 626 "PUBLIC INFORMATION SERVICES" PROJECT SPECIAL PROVISION WORKSHEET SPECIFICATION IS REQUIRED WITH PROJECT.

★ SEE FINES DOUBLE SIGNING NOTES ON SHEET 12.

CASE NO. 1
TYPICAL APPLICATION
CLOSURE OF ONE ROADWAY 4-LANE DIVIDED HIGHWAY

Computer File Information		Sheet Revisions	
Creation Date: 07/04/12 Initials: RRR		Date:	Comments
Last Modification Date: Initials:	R-X		
Full Path: www.coloradodot.info/library/traffic/traffic-s-standard-plans	R-X		
Drawing File Name: S-630-01_3of24.dgn	R-X		
CAD Ver.: MicroStation V8 Scale: Not to Scale Units: English	R-X		

Colorado Department of Transportation
4201 East Arkansas Avenue
Denver, Colorado 80222
Phone: (303) 757-9543
Fax: (303) 757-9219
Safety & Traffic Engineering Branch KCM/KEN

TRAFFIC CONTROLS FOR HIGHWAY CONSTRUCTION

Issued By: Safety & Traffic Engineering Branch July 4, 2012

STANDARD PLAN NO.
S-630-1
Sheet No. 3 of 24

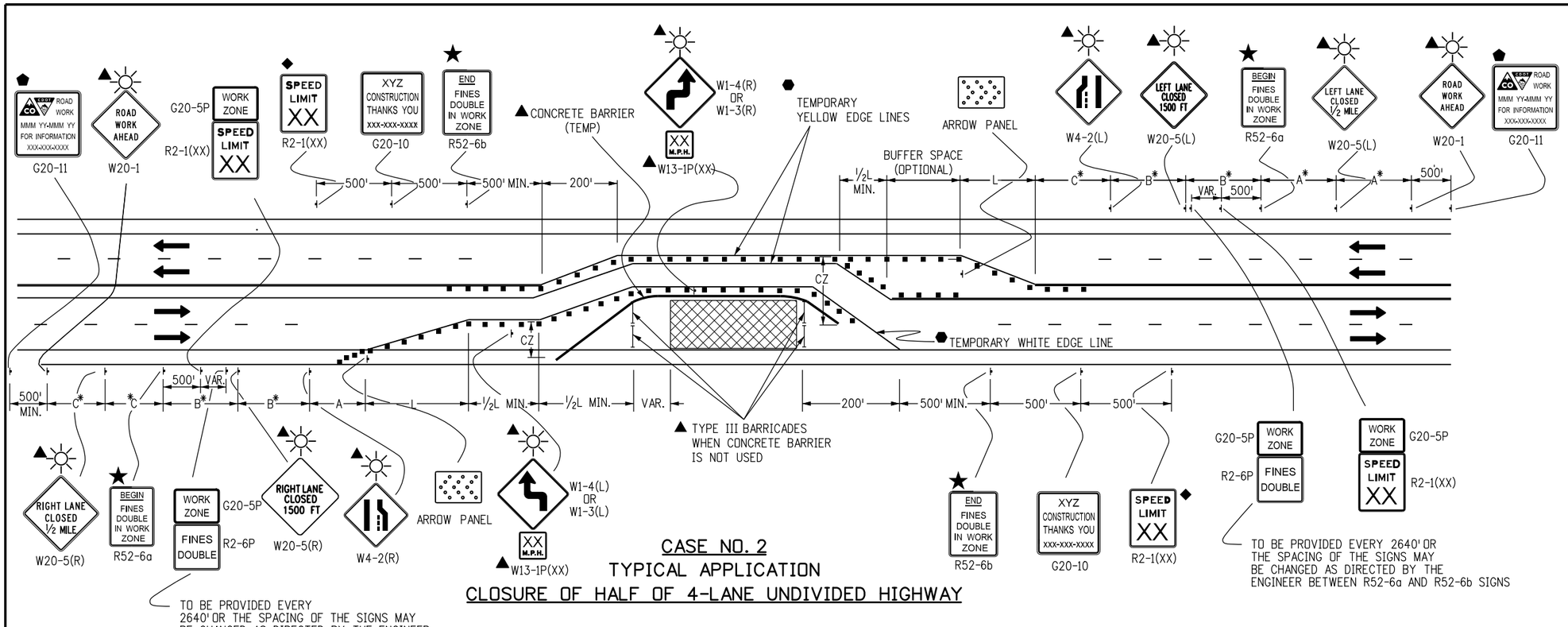

CASE NO. 2
TYPICAL APPLICATION
CLOSURE OF HALF OF 4-LANE UNDIVIDED HIGHWAY

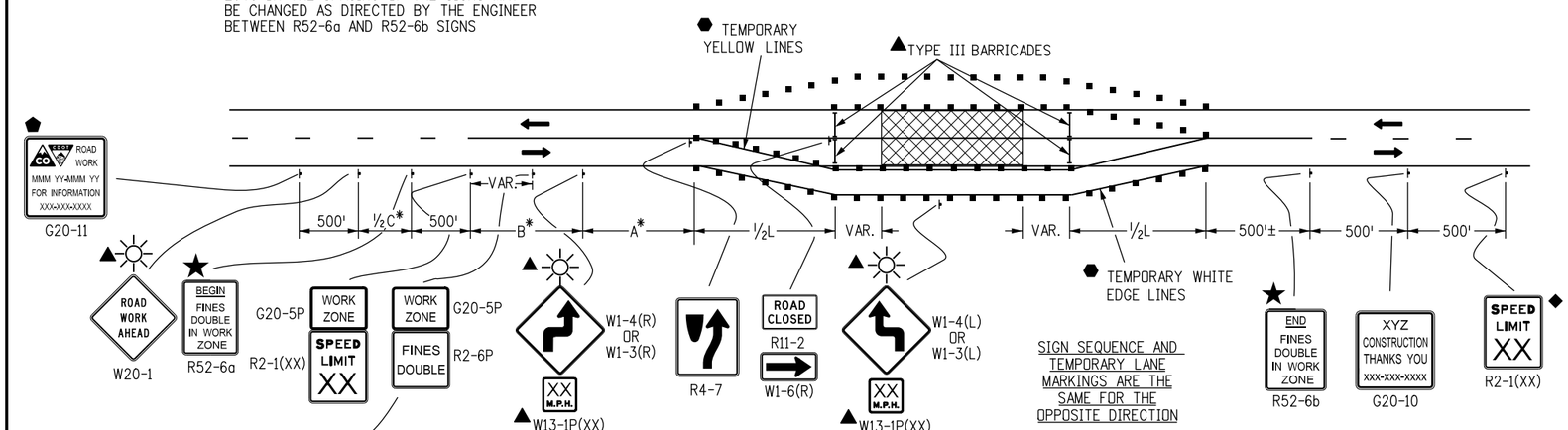

SIGN SEQUENCE AND TEMPORARY LANE MARKINGS ARE THE SAME FOR THE OPPOSITE DIRECTION

CASE NO. 3
TYPICAL APPLICATION
ROAD CLOSURE, USE OF ADJACENT SHOULDERS

LEGEND

- ■ CHANNELIZING DEVICE: FOR TYPE OF DEVICE TO BE USED, SEE SCHEDULE OF TRAFFIC CONTROL DEVICES INCLUDED IN THE PLANS. DRUMS OR VERTICAL PANELS SHALL BE USED TO DELINEATE THE LANE CLOSURE TAPER.
- TYPE III BARRICADE
- FLAGGER
- DIRECTION OF TRAVEL
- WORK AREA

L TRANSITION TAPER LENGTH:

L = MINIMUM LENGTH OF TAPER

SPEED 45 MPH OR MORE: $L = S \times W$

SPEED 40 MPH OR LESS: $L = \frac{WS^2}{60}$

S = NUMERICAL VALUE OF SPEED LIMIT OR 85 PERCENTILE SPEED

W = WIDTH OF OFFSET

SHOULDER TAPER = 1/3 L

- ADVANCE WARNING FLASHING OR SEQUENCING ARROW PANEL.

A = 100' (URBAN LOW SPEED)
350' (URBAN HIGH SPEED)
500' (RURAL)
1,000' (EXPRESSWAY / FREEWAY)

CZ CLEAR ZONE (SEE GENERAL NOTE 16 ON SHEET 1)

▲ THESE DEVICES ARE OPTIONAL. THEIR NEED SHALL BE DETERMINED BY DETOUR DESIGN AND/OR SCOPE OF CONSTRUCTION ACTIVITY, AND ARE REQUIRED WHEN THEY ARE INCLUDED IN THE SCHEDULE OF CONSTRUCTION CONTROL DEVICES.

◆ THESE DEVICES ARE NOT OPTIONAL IF THE POSTED SPEED LIMIT IN THE WORK ZONE IS REDUCED.

VAR. BUFFER SPACE (SEE GENERAL NOTE 21 ON SHEET 1).

⬢ REQUIRED WHEN WORK OCCUPIES THE LOCATION FOR MORE THAN 3 DAYS.

⬟ G20-11 SIGN IS REQUIRED WHEN SECTION 626 "PUBLIC INFORMATION SERVICES" PROJECT SPECIAL PROVISION WORKSHEET SPECIFICATION IS REQUIRED WITH PROJECT.

- FLASHING BEACON
- ★ SEE FINES DOUBLE SIGNING NOTES ON SHEET 12.

* KEY TO ADVANCE SIGNING DISTANCES

ROAD TYPE	DISTANCE BETWEEN SIGNS		
	A	B	C
URBAN (<=40 MPH)	100	100	100
URBAN (>=45 MPH)	350	350	350
RURAL	500	500	500
EXPRESSWAY/FREEWAY	1000	1500	2640

Computer File Information	
Creation Date: 07/04/12	Initials: RRR
Last Modification Date: 02/27/13	Initials: KEN
Full Path: www.coloradodot.info/library/traffic/traffic-s-standard-plans	
Drawing File Name: S-630-01_4of24.dgn	
CAD Ver.: MicroStation V8 Scale: Not to Scale	Units: English

	Sheet Revisions	
	Date:	Comments
R-3	02/27/13	UPDATE TAPER TO MUTCD STD
R-X		
R-X		
R-X		

Colorado Department of Transportation
4201 East Arkansas Avenue
Denver, Colorado 80222
Phone: (303) 757-9543
Fax: (303) 757-9219
Safety & Traffic Engineering Branch KCM/KEN

TRAFFIC CONTROLS FOR HIGHWAY CONSTRUCTION

Issued By: Safety & Traffic Engineering Branch July 4, 2012

STANDARD PLAN NO.
S-630-1
Sheet No. 4 of 24

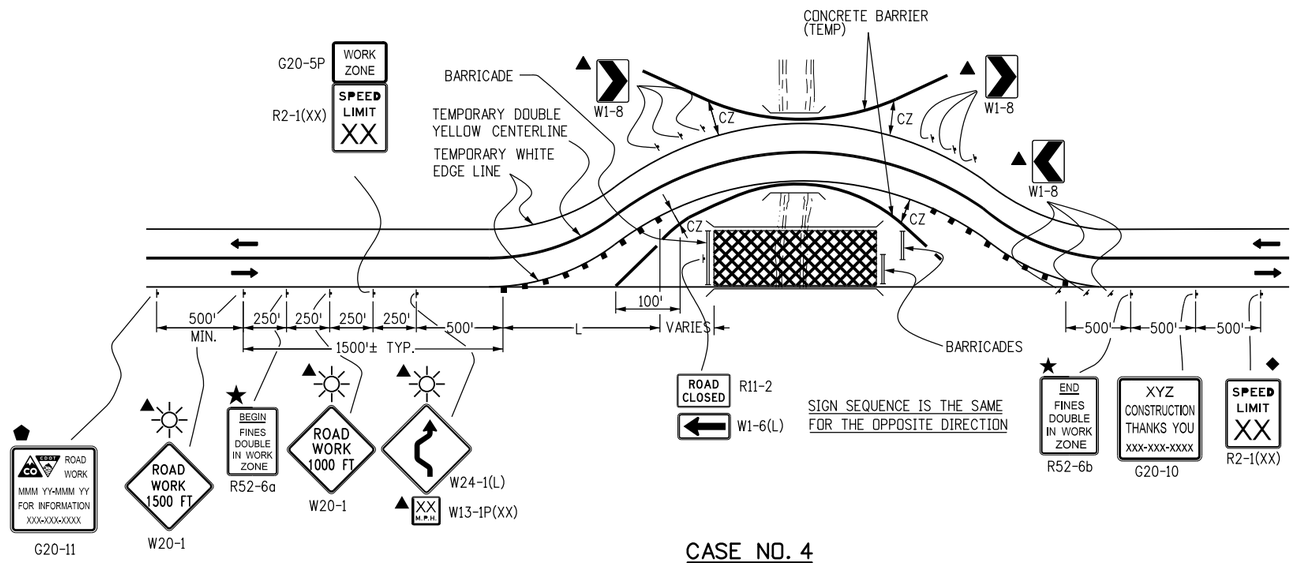

CASE NO. 4
TYPICAL APPLICATION
ROAD CLOSURE, BYPASS DETOUR PROVIDED

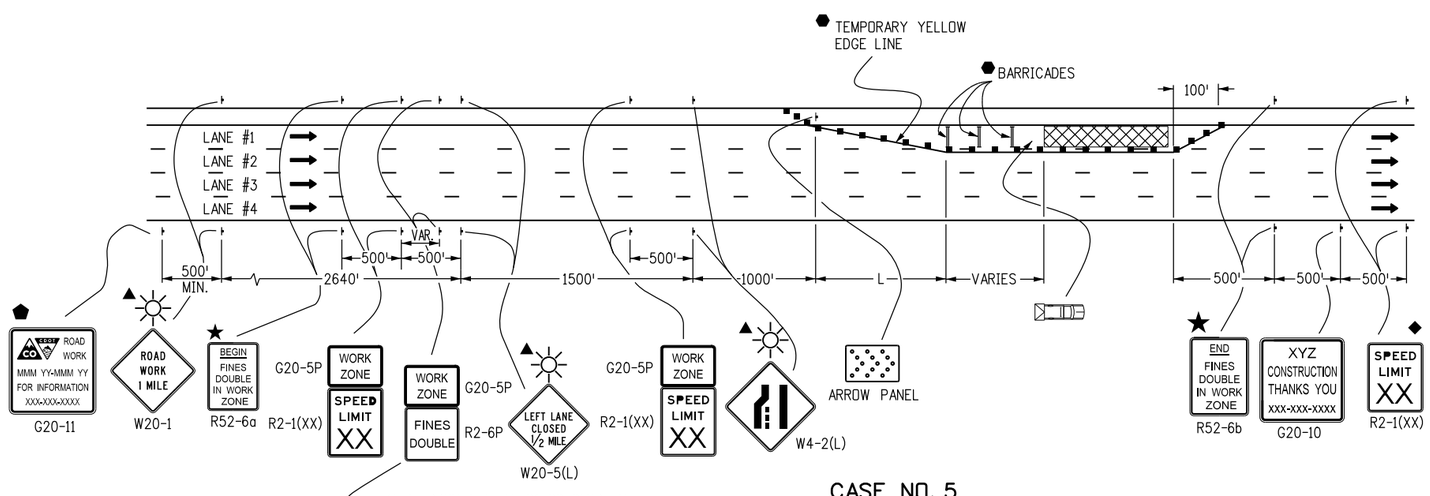

CASE NO. 5
TYPICAL APPLICATION
LANE #1 CLOSURE, MULTI-LANE FREEWAY

LEGEND

- CHANNELIZING DEVICE: FOR TYPE OF DEVICE TO BE USED, SEE SCHEDULE OF TRAFFIC CONTROL DEVICES INCLUDED IN THE PLANS. DRUMS OR VERTICAL PANELS SHALL BE USED TO DELINEATE THE LANE CLOSURE TAPER.
- TYPE III BARRICADE
- CONCRETE BARRIER (TEMPORARY)
- FLAGGER
- DIRECTION OF TRAVEL
- WORK AREA
- L — TRANSITION TAPER LENGTH:
  - L = MINIMUM LENGTH OF TAPER
  - SPEED 45 MPH OR MORE: $L = S \times W$
  - SPEED 40 MPH OR LESS: $L = \frac{WS^2}{60}$
  - S = NUMERICAL VALUE OF SPEED LIMIT OR 85 PERCENTILE SPEED
  - W = WIDTH OF OFFSET
  - SHOULDER TAPER = 1/3 L
- ADVANCE WARNING FLASHING OR SEQUENCING ARROW PANEL
- CZ — CLEAR ZONE (SEE GENERAL NOTE 16 ON SHEET 1).
- ▲ THESE DEVICES ARE OPTIONAL. THEIR NEED SHALL BE DETERMINED BY DETOUR DESIGN AND/OR SCOPE OF CONSTRUCTION ACTIVITY, AND ARE REQUIRED WHEN THEY ARE INCLUDED IN THE SCHEDULE OF CONSTRUCTION CONTROL DEVICES.
- ◆ THESE DEVICES ARE NOT OPTIONAL IF THE POSTED SPEED LIMIT IN THE WORK ZONE IS REDUCED.
- VARIES — BUFFER SPACE (SEE GENERAL NOTE 21 ON SHEET 1).
- ⬢ REQUIRED WHEN WORK OCCUPIES THE LOCATION FOR MORE THAN 3 DAYS.
- ⬟ G20-11 SIGN IS REQUIRED WHEN SECTION 626 "PUBLIC INFORMATION SERVICES" PROJECT SPECIAL PROVISION WORKSHEET SPECIFICATION IS REQUIRED WITH PROJECT.
- TRUCK MOUNTED ATTENUATOR (TMA)
- FLASHING BEACON
- ★ SEE FINES DOUBLE SIGNING NOTES ON SHEET 12.

Computer File Information		Sheet Revisions	
Creation Date: 07/04/12 Initials: RRR		Date:	Comments
Last Modification Date: Initials:	R-X		
Full Path: www.coloradodot.info/library/traffic/traffic-s-standard-plans	R-X		
Drawing File Name: S-630-01_5of24.dgn	R-X		
CAD Ver.: MicroStation V8 Scale: Not to Scale Units: English	R-X		

Colorado Department of Transportation
4201 East Arkansas Avenue
Denver, Colorado 80222
Phone: (303) 757-9543
Fax: (303) 757-9219
Safety & Traffic Engineering Branch KCM/KEN

TRAFFIC CONTROLS FOR HIGHWAY CONSTRUCTION

Issued By: Safety & Traffic Engineering Branch July 4, 2012

STANDARD PLAN NO.
S-630-1
Sheet No. 5 of 24

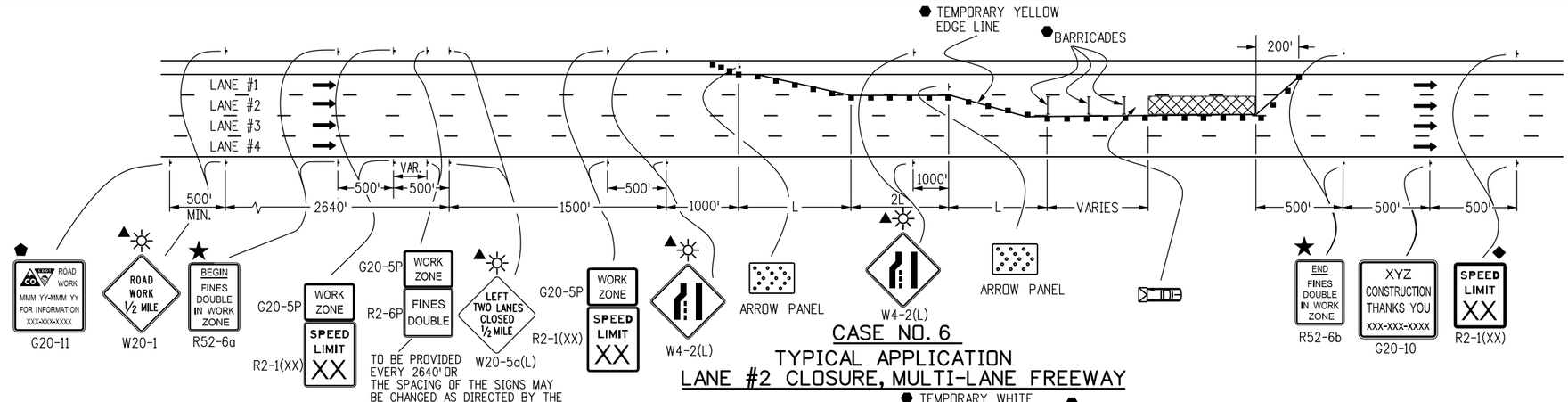

CASE NO. 6
TYPICAL APPLICATION
LANE #2 CLOSURE, MULTI-LANE FREEWAY

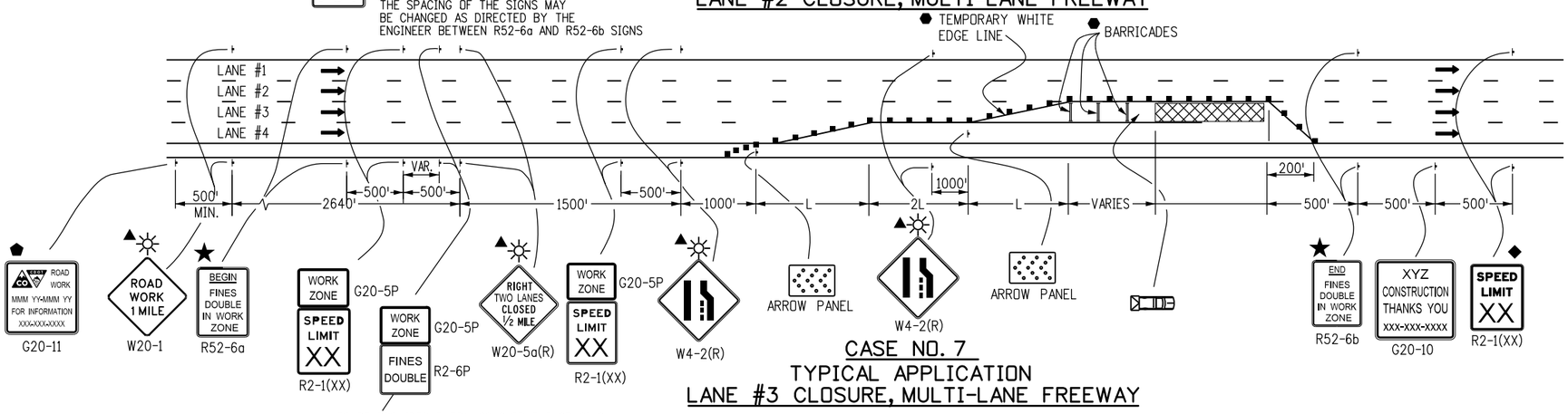

CASE NO. 7
TYPICAL APPLICATION
LANE #3 CLOSURE, MULTI-LANE FREEWAY

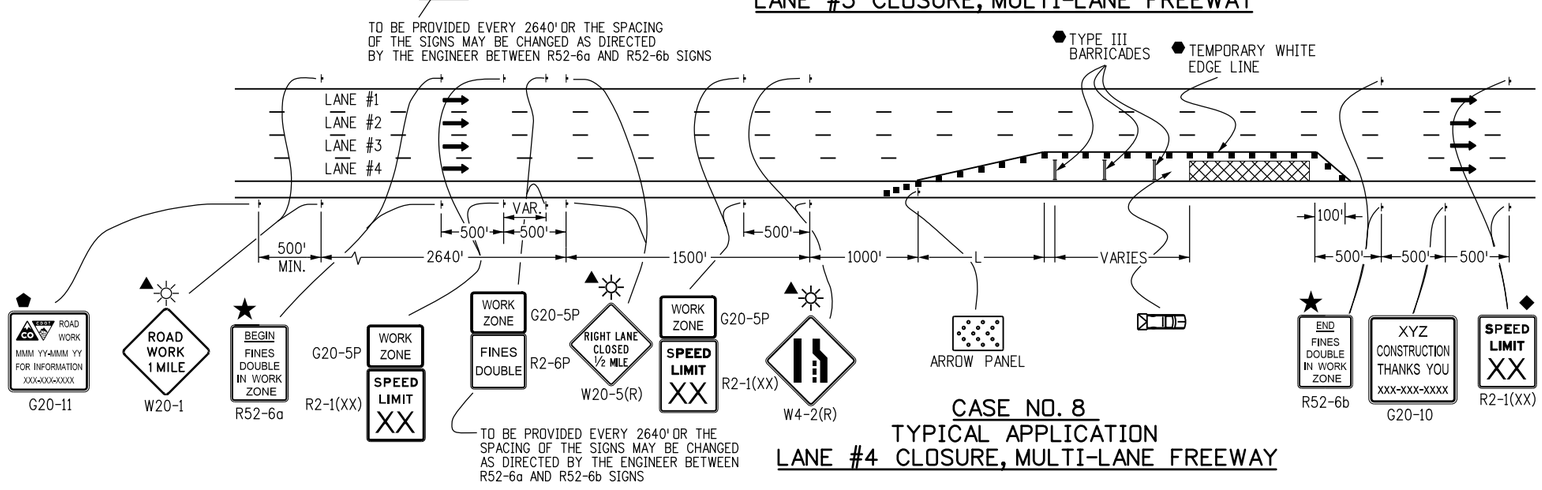

CASE NO. 8
TYPICAL APPLICATION
LANE #4 CLOSURE, MULTI-LANE FREEWAY

LEGEND

- ■ CHANNELIZING DEVICE: FOR TYPE OF DEVICE TO BE USED, SEE SCHEDULE OF TRAFFIC CONTROL DEVICES INCLUDED IN THE PLANS. DRUMS OR VERTICAL PANELS SHALL BE USED TO DELINEATE THE LANE CLOSURE TAPER.
- TYPE III BARRICADE
- CONCRETE BARRIER (TEMPORARY)
- FLAGGER
- DIRECTION OF TRAVEL
- WORK AREA
- L — TRANSITION TAPER LENGTH:
  - L = MINIMUM LENGTH OF TAPER
  - SPEED 45 MPH OR MORE: $L = S \times W$
  - SPEED 40 MPH OR LESS: $L = \frac{WS^2}{60}$
  - S = NUMERICAL VALUE OF SPEED LIMIT OR 85 PERCENTILE SPEED
  - W = WIDTH OF OFFSET
  - SHOULDER TAPER = 1/3 L
- ADVANCE WARNING FLASHING OR SEQUENCING ARROW PANEL
- CZ — CLEAR ZONE (SEE GENERAL NOTE 16 ON SHEET 1).
- ▲ THESE DEVICES ARE OPTIONAL. THEIR NEED SHALL BE DETERMINED BY DETOUR DESIGN AND/OR SCOPE OF CONSTRUCTION ACTIVITY, AND ARE REQUIRED WHEN THEY ARE INCLUDED IN THE SCHEDULE OF CONSTRUCTION CONTROL DEVICES.
- ◆ THESE DEVICES ARE NOT OPTIONAL IF THE POSTED SPEED LIMIT IN THE WORK ZONE IS REDUCED.
- VARIES — BUFFER SPACE (SEE GENERAL NOTE 21 ON SHEET 1).
- ⬢ REQUIRED WHEN WORK OCCUPIES THE LOCATION FOR MORE THAN 3 DAYS.
- ⬟ G20-11 SIGN IS REQUIRED WHEN SECTION 626 "PUBLIC INFORMATION SERVICES" PROJECT SPECIAL PROVISION WORKSHEET SPECIFICATION IS REQUIRED WITH PROJECT.
- TRUCK MOUNTED ATTENUATOR (TMA)
- FLASHING BEACON
- ★ SEE FINES DOUBLE SIGNING NOTES ON SHEET 12.

Computer File Information		Sheet Revisions	
Creation Date: 07/04/12 Initials: RRR		Date:	Comments
Last Modification Date: Initials:	R-X		
Full Path: www.coloradodot.info/library/traffic/traffic-s-standard-plans	R-X		
Drawing File Name: S-630-01_6of24.dgn	R-X		
CAD Ver.: MicroStation V8 Scale: Not to Scale Units: English	R-X		

Colorado Department of Transportation
4201 East Arkansas Avenue
Denver, Colorado 80222
Phone: (303) 757-9543
Fax: (303) 757-9219
Safety & Traffic Engineering Branch KCM/KEN

TRAFFIC CONTROLS FOR HIGHWAY CONSTRUCTION

Issued By: Safety & Traffic Engineering Branch July 4, 2012

STANDARD PLAN NO.
S-630-1
Sheet No. 6 of 24

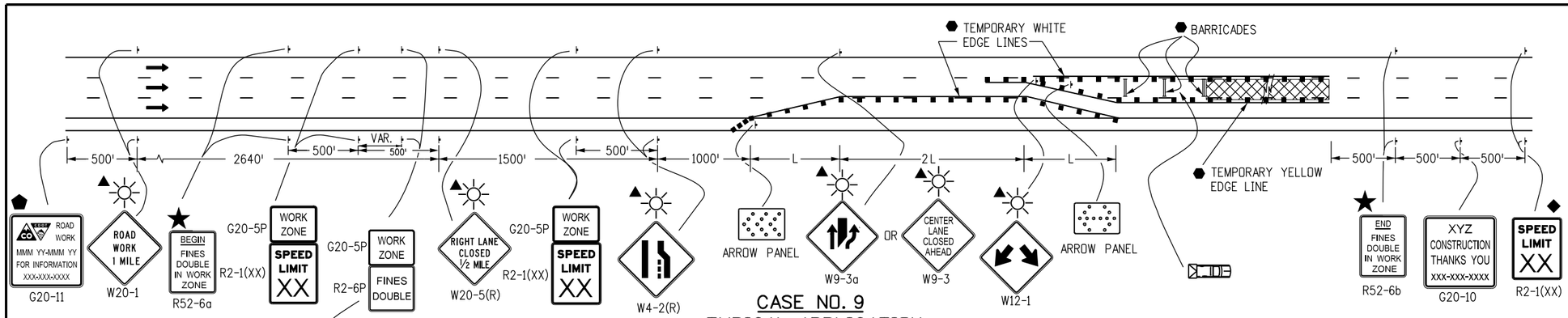

CASE NO. 9
TYPICAL APPLICATION
CENTER LANE CLOSURE - MULTI-LANE FREEWAY

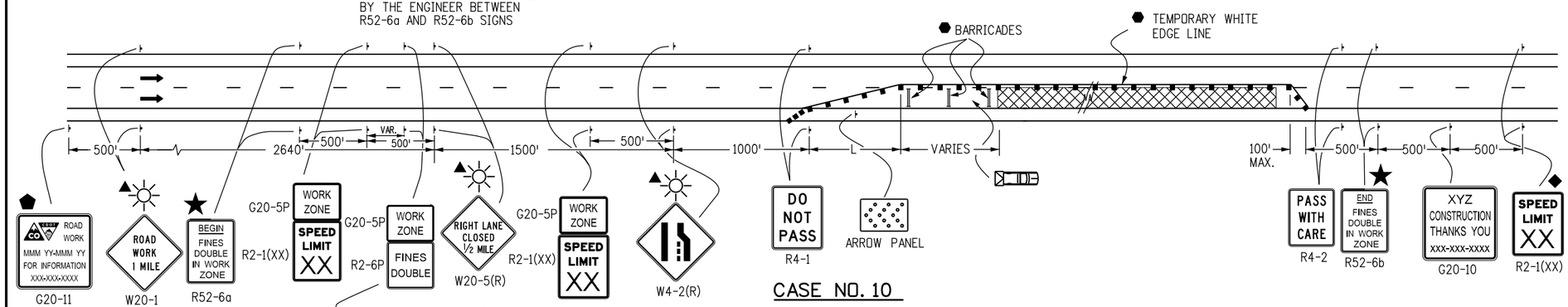

CASE NO. 10
TYPICAL APPLICATION
ONE LANE CLOSED - 4-LANE DIVIDED HIGHWAY

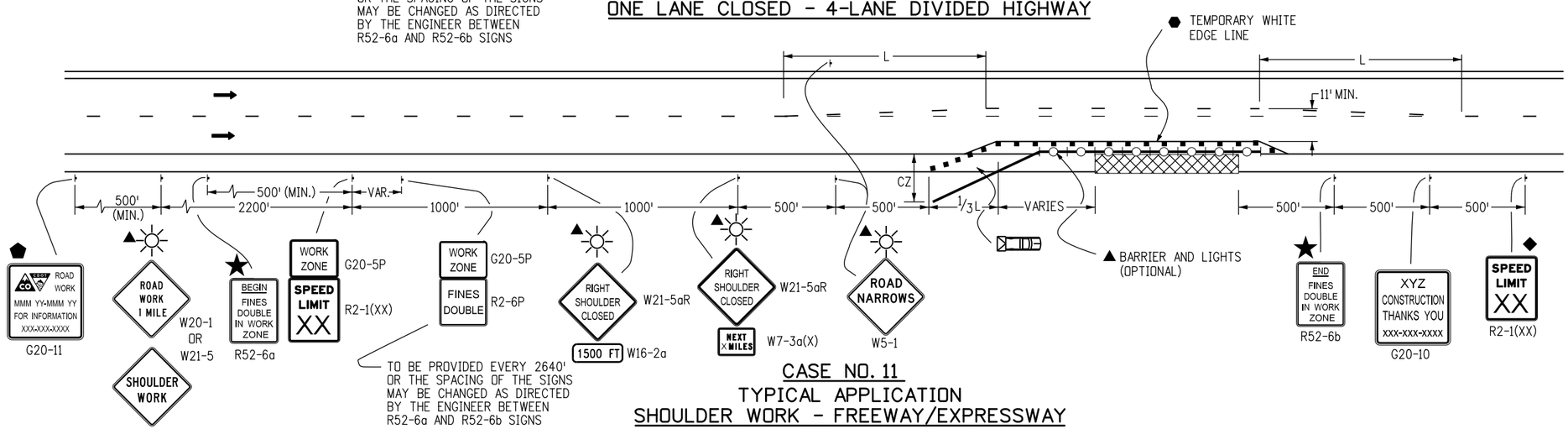

CASE NO. 11
TYPICAL APPLICATION
SHOULDER WORK - FREEWAY/EXPRESSWAY

LEGEND

- ■ CHANNELIZING DEVICE: FOR TYPE OF DEVICE TO BE USED, SEE SCHEDULE OF TRAFFIC CONTROL DEVICES INCLUDED IN THE PLANS. DRUMS OR VERTICAL PANELS SHALL BE USED TO DELINEATE THE LANE CLOSURE TAPER.
- TYPE III BARRICADE
- CONCRETE BARRIER (TEMPORARY)
- FLAGGER
- DIRECTION OF TRAVEL
- WORK AREA

L TRANSITION TAPER LENGTH:

L = MINIMUM LENGTH OF TAPER

SPEED 45 MPH OR MORE: $L = S \times W$

SPEED 40 MPH OR LESS: $L = \frac{WS^2}{60}$

S = NUMERICAL VALUE OF SPEED LIMIT OR 85 PERCENTILE SPEED

W = WIDTH OF OFFSET

SHOULDER TAPER = 1/3 L

- ADVANCE WARNING FLASHING OR SEQUENCING ARROW PANEL
- CZ — CLEAR ZONE (SEE GENERAL NOTE 16 ON SHEET 1).
- ▲ THESE DEVICES ARE OPTIONAL. THEIR NEED SHALL BE DETERMINED BY DETOUR DESIGN AND/OR SCOPE OF CONSTRUCTION ACTIVITY, AND ARE REQUIRED WHEN THEY ARE INCLUDED IN THE SCHEDULE OF CONSTRUCTION CONTROL DEVICES.
- ◆ THESE DEVICES ARE NOT OPTIONAL IF THE POSTED SPEED LIMIT IN THE WORK ZONE IS REDUCED.
- FLASHING BEACON
- VARIES — BUFFER SPACE (SEE GENERAL NOTE 21 ON SHEET 1).
- ⬢ REQUIRED WHEN WORK OCCUPIES THE LOCATION FOR MORE THAN 3 DAYS.
- ⬟ G20-11 SIGN IS REQUIRED WHEN SECTION 626 "PUBLIC INFORMATION SERVICES" PROJECT SPECIAL PROVISION WORKSHEET SPECIFICATION IS REQUIRED WITH PROJECT.
- TRUCK MOUNTED ATTENUATOR (TMA)
- CONCRETE BARRIER (TEMPORARY) WITH LIGHTS
- ★ SEE FINES DOUBLE SIGNING NOTES ON SHEET 12.

Computer File Information	
Creation Date: 07/04/12	Initials: RRR
Last Modification Date:	Initials:
Full Path: www.coloradodot.info/library/traffic/traffic-s-standard-plans	
Drawing File Name: S-630-01_7of24.dgn	
CAD Ver.: MicroStation V8 Scale: Not to Scale	Units: English

	Sheet Revisions	
	Date:	Comments
R-X		
R-X		
R-X		
R-X		

Colorado Department of Transportation
4201 East Arkansas Avenue
Denver, Colorado 80222
Phone: (303) 757-9543
Fax: (303) 757-9219
Safety & Traffic Engineering Branch

KCM/KEN

TRAFFIC CONTROLS FOR HIGHWAY CONSTRUCTION

Issued By: Safety & Traffic Engineering Branch July 4, 2012

STANDARD PLAN NO.

S-630-1

Sheet No. 7 of 24

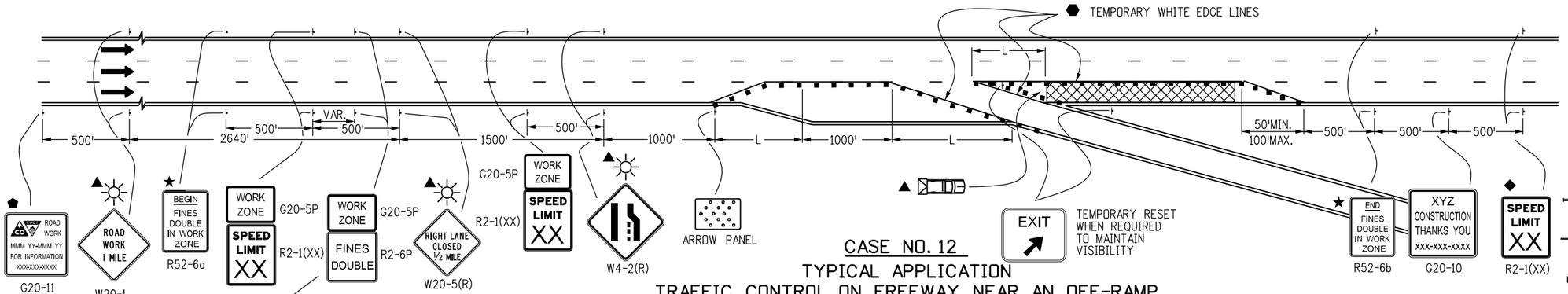

CASE NO. 12
TYPICAL APPLICATION
TRAFFIC CONTROL ON FREEWAY NEAR AN OFF-RAMP

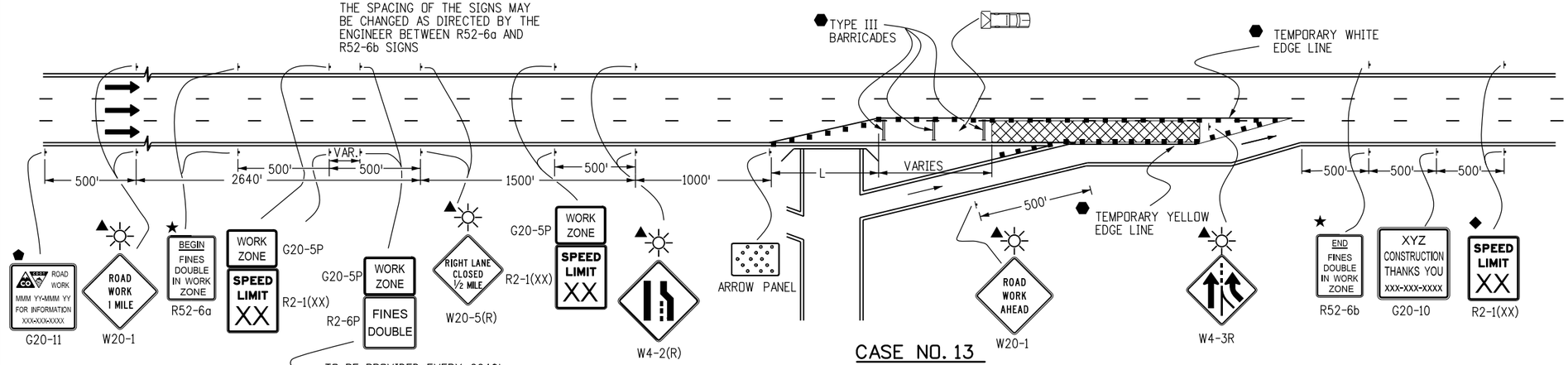

CASE NO. 13
TYPICAL APPLICATION - TRAFFIC CONTROL ON FREEWAY BEFORE AN ON-RAMP

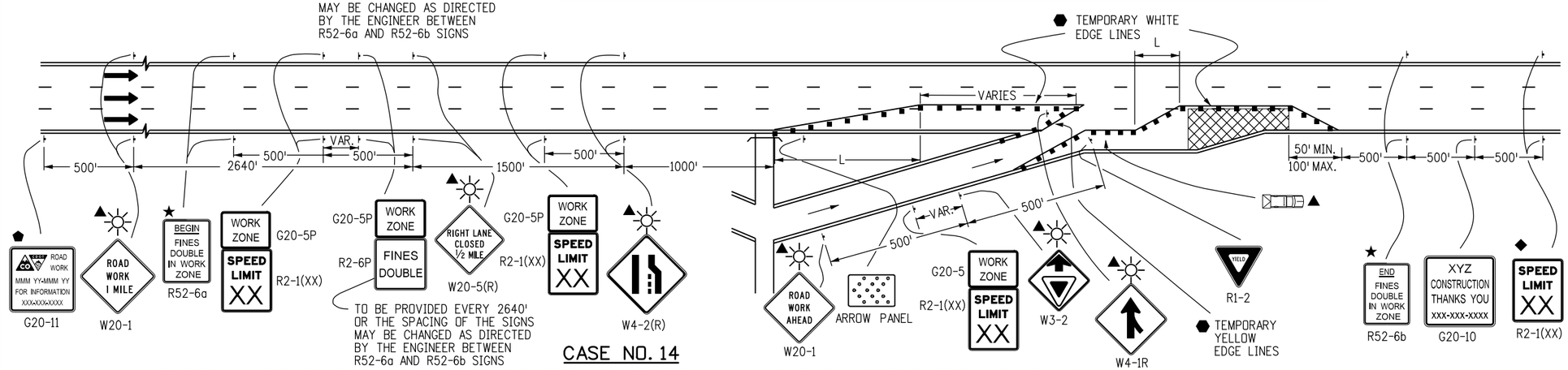

CASE NO. 14
TYPICAL APPLICATION - TRAFFIC CONTROL ON FREEWAY ALLOWING ACCESS FROM ON-RAMP

LEGEND

- ■ CHANNELIZING DEVICE: FOR TYPE OF DEVICE TO BE USED, SEE SCHEDULE OF TRAFFIC CONTROL DEVICES INCLUDED IN THE PLANS. DRUMS OR VERTICAL PANELS SHALL BE USED TO DELINEATE THE LANE CLOSURE TAPER.
- TYPE III BARRICADE
- CONCRETE BARRIER (TEMPORARY)
- FLAGGER
- DIRECTION OF TRAVEL
- WORK AREA
- L TRANSITION TAPER LENGTH:
  - L = MINIMUM LENGTH OF TAPER
  - SPEED 45 MPH OR MORE: $L = S \times W$
  - SPEED 40 MPH OR LESS: $L = \frac{WS^2}{60}$
  - S = NUMERICAL VALUE OF SPEED LIMIT OR 85 PERCENTILE SPEED
  - W = WIDTH OF OFFSET
  - SHOULDER TAPER = 1/3 L
- ADVANCE WARNING FLASHING OR SEQUENCING ARROW PANEL
- CZ CLEAR ZONE (SEE GENERAL NOTE 16 ON SHEET 1).
- ▲ THESE DEVICES ARE OPTIONAL. THEIR NEED SHALL BE DETERMINED BY DETOUR DESIGN AND/OR SCOPE OF CONSTRUCTION ACTIVITY, AND ARE REQUIRED WHEN THEY ARE INCLUDED IN THE SCHEDULE OF CONSTRUCTION CONTROL DEVICES.
- ◆ THESE DEVICES ARE NOT OPTIONAL IF THE POSTED SPEED LIMIT IN THE WORK ZONE IS REDUCED.
- VARIES BUFFER SPACE (SEE GENERAL NOTE 21).
- ⬢ REQUIRED WHEN WORK OCCUPIES THE LOCATION FOR MORE THAN 3 DAYS.
- ⬟ G20-11 SIGN IS REQUIRED WHEN SECTION 626 "PUBLIC INFORMATION SERVICES" PROJECT SPECIAL PROVISION WORKSHEET SPECIFICATION IS REQUIRED WITH PROJECT.
- TRUCK MOUNTED ATTENUATOR (TMA)
- FLASHING BEACON
- ★ SEE FINES DOUBLE SIGNING NOTES ON SHEET 12.

Computer File Information		Sheet Revisions	
Creation Date: 07/04/12 Initials: KEN		Date:	Comments
Last Modification Date: Initials:	R-X		
Full Path: www.coloradodot.info/library/traffic/traffic-s-standard-plans	R-X		
Drawing File Name: S-630-01_8of24.dgn	R-X		
CAD Ver.: MicroStation V8 Scale: Not to Scale Units: English	R-X		

Colorado Department of Transportation
4201 East Arkansas Avenue
Denver, Colorado 80222
Phone: (303) 757-9543
Fax: (303) 757-9219
Safety & Traffic Engineering Branch KCM/KEN

TRAFFIC CONTROLS FOR HIGHWAY CONSTRUCTION

Issued By: Safety & Traffic Engineering Branch July 4, 2012

STANDARD PLAN NO.
S-630-1
Sheet No. 8 of 24

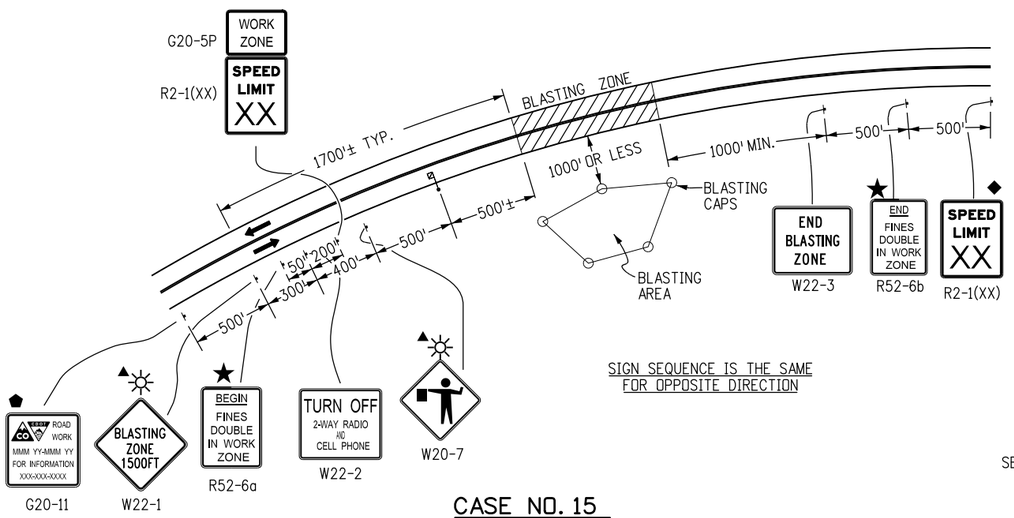

SIGN SEQUENCE IS THE SAME FOR OPPOSITE DIRECTION

CASE NO. 15
TYPICAL APPLICATION
BLASTING ZONE

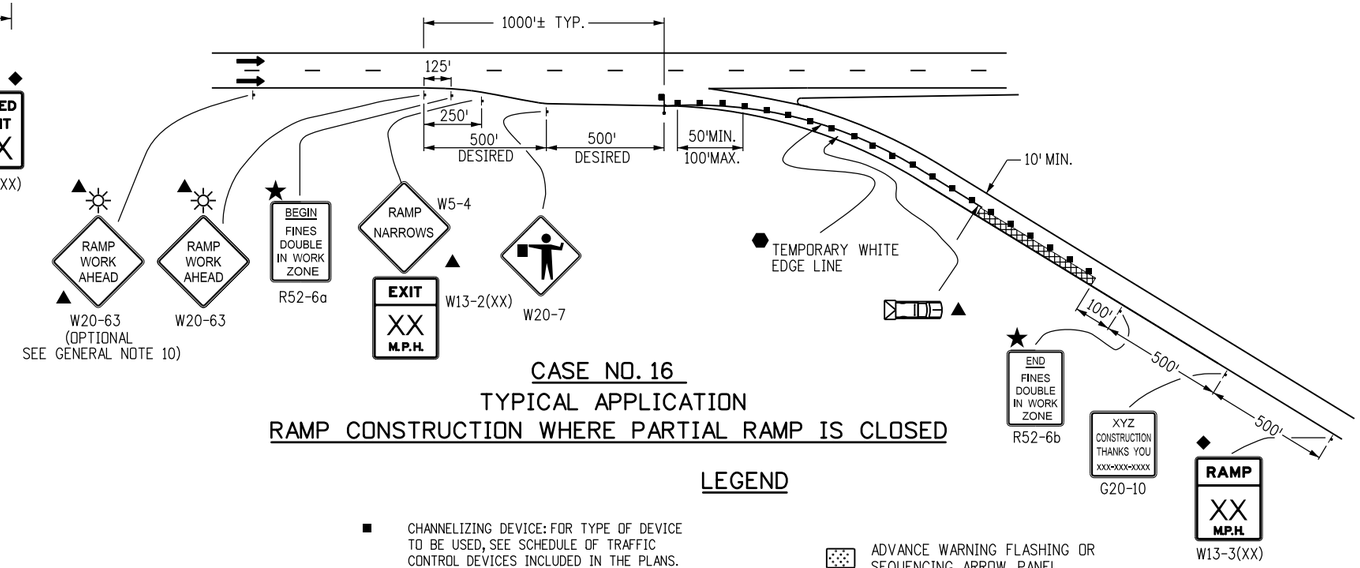

CASE NO. 16
TYPICAL APPLICATION
RAMP CONSTRUCTION WHERE PARTIAL RAMP IS CLOSED

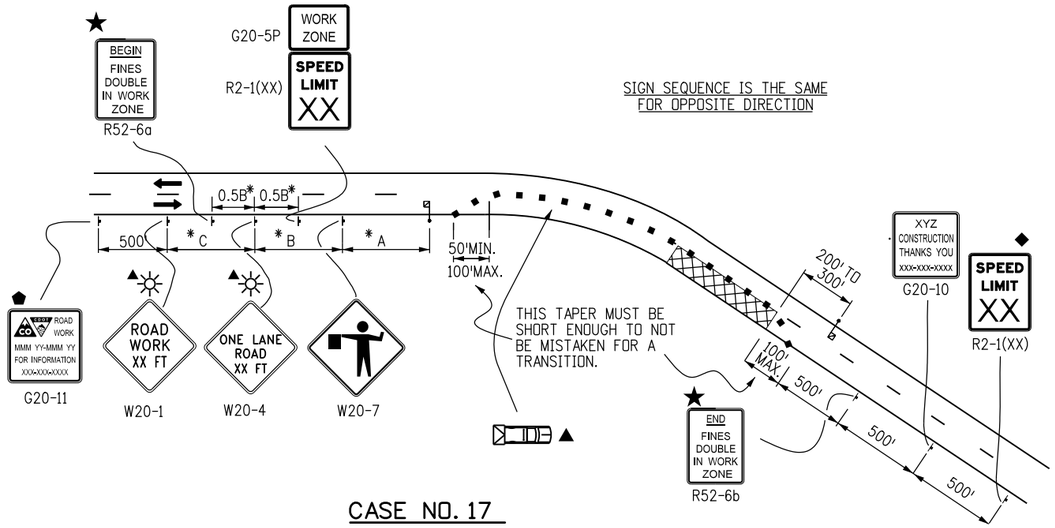

SIGN SEQUENCE IS THE SAME FOR OPPOSITE DIRECTION

CASE NO. 17
TYPICAL APPLICATION
LANE CLOSURE, 2-LANE HIGHWAY, AT CURVE

LEGEND

- ■ CHANNELIZING DEVICE: FOR TYPE OF DEVICE TO BE USED, SEE SCHEDULE OF TRAFFIC CONTROL DEVICES INCLUDED IN THE PLANS. DRUMS OR VERTICAL PANELS SHALL BE USED TO DELINEATE THE LANE CLOSURE TAPER.
- TYPE III BARRICADE
- CONCRETE BARRIER (TEMPORARY)
- FLAGGER
- DIRECTION OF TRAVEL
- WORK AREA
- L TRANSITION TAPER LENGTH:
  - L = MINIMUM LENGTH OF TAPER
  - SPEED 45 MPH OR MORE: $L = S \times W$
  - SPEED 40 MPH OR LESS: $L = \frac{WS^2}{60}$
  - S = NUMERICAL VALUE OF SPEED LIMIT OR 85 PERCENTILE SPEED
  - W = WIDTH OF OFFSET
  - SHOULDER TAPER = 1/3 L
- TRUCK MOUNTED ATTENUATOR (TMA)
- ★ SEE FINES DOUBLE SIGNING NOTES ON SHEET 12
- ADVANCE WARNING FLASHING OR SEQUENCING ARROW PANEL
- CZ CLEAR ZONE (SEE GENERAL NOTE 16 ON SHEET 1).
- ▲ THESE DEVICES ARE OPTIONAL. THEIR NEED SHALL BE DETERMINED BY DETOUR DESIGN AND/OR SCOPE OF CONSTRUCTION ACTIVITY, AND ARE REQUIRED WHEN THEY ARE INCLUDED IN THE SCHEDULE OF CONSTRUCTION CONTROL DEVICES.
- ◆ THESE DEVICES ARE NOT OPTIONAL IF THE POSTED SPEED LIMIT IN THE WORK ZONE IS REDUCED.
- FLASHING BEACON
- ⬢ REQUIRED WHEN WORK OCCUPIES THE LOCATION FOR MORE THAN 3 DAYS.
- ⬟ G20-11 SIGN IS REQUIRED WHEN SECTION 626 "PUBLIC INFORMATION SERVICES" PROJECT SPECIAL PROVISION WORKSHEET SPECIFICATION IS REQUIRED WITH PROJECT.

*KEY TO ADVANCE SIGNING DISTANCES

ROAD TYPE	DISTANCE BETWEEN SIGNS		
	A	B	C
URBAN (<=40 MPH)	100	100	100
URBAN (>=45 MPH)	350	350	350
RURAL	500	500	500
EXPRESSWAY/FREEWAY	1000	1500	2640

Computer File Information		
Creation Date: 07/04/12	Initials: RRR	
Last Modification Date: 07/26/13	Initials: KEN	R-4
Full Path: www.coloradodot.info/library/traffic/traffic-s-standard-plans		R-X
Drawing File Name: S-630-01_9of24.dgn		R-X
CAD Ver.: MicroStation V8 Scale: Not to Scale Units: English		R-X

Sheet Revisions	
Date:	Comments
07/26/13	CORRECTED SIGN CODE DESIGNATION FOR FLAGGER (SYMBOL) SIGN TO W20-7

Colorado Department of Transportation
4201 East Arkansas Avenue
Denver, Colorado 80222
Phone: (303) 757-9543
Fax: (303) 757-9219
Safety & Traffic Engineering Branch KCM/KEN

TRAFFIC CONTROLS FOR HIGHWAY CONSTRUCTION

Issued By: Safety & Traffic Engineering Branch July 4, 2012

STANDARD PLAN NO.
S-630-1
Sheet No. 9 of 24

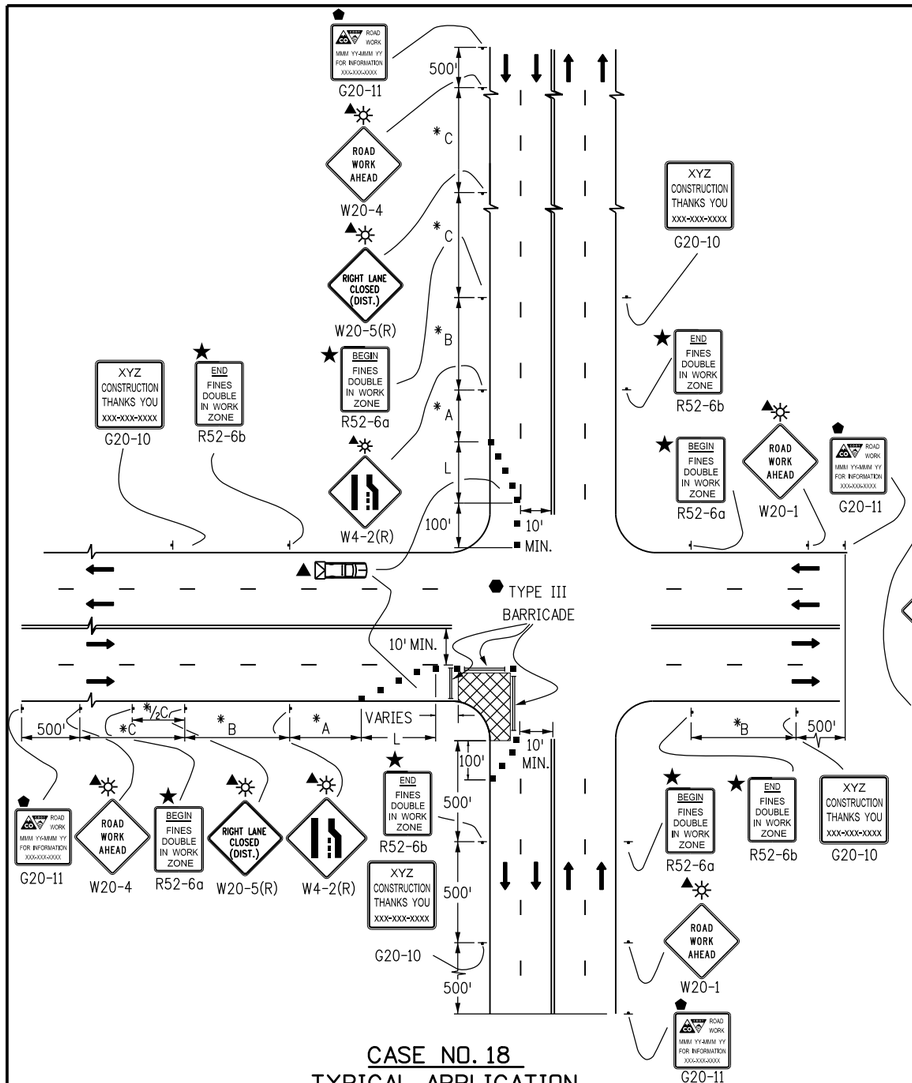

CASE NO. 18
TYPICAL APPLICATION
TRAFFIC CONTROL AROUND A WORK AREA NEAR AN INTERSECTION, ONE LANE CLOSED

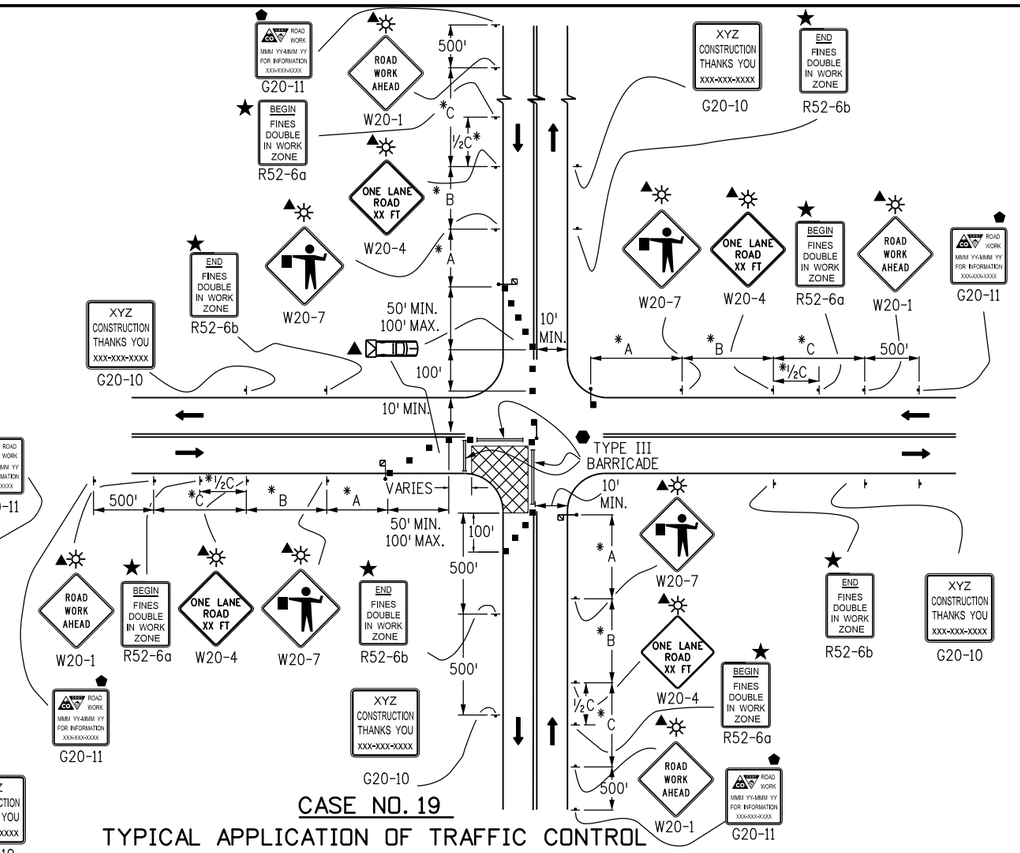

CASE NO. 19
TYPICAL APPLICATION OF TRAFFIC CONTROL AROUND A WORK AREA NEAR AN INTERSECTION

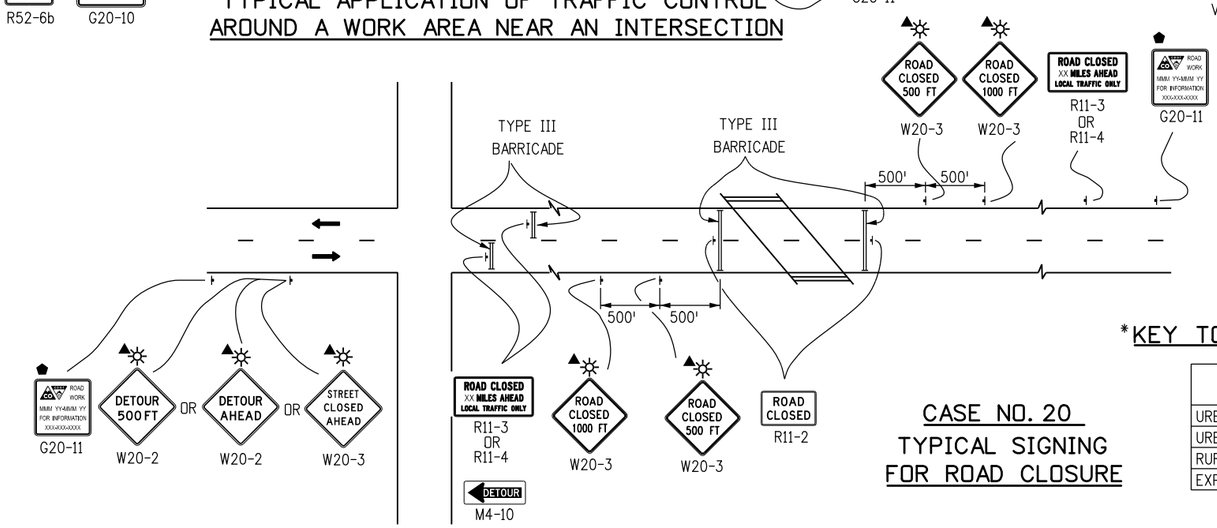

CASE NO. 20
TYPICAL SIGNING FOR ROAD CLOSURE

NOTES:

1. SIGN PLACEMENT SHOWN ON CASES 18 AND 19 TYPIFIES RURAL APPLICATIONS. URBAN APPLICATIONS REQUIRE THE SIGNS TO BE PLACED WITHIN ONE, OR PERHAPS TWO, BLOCKS.
2. TRUCK-MOUNTED ATTENUATORS (TMA) OPTIONAL FOR ALL CASES AS DETERMINED BY THE ENGINEER.

LEGEND

- ■ CHANNELIZING DEVICE: FOR TYPE OF DEVICE TO BE USED, SEE SCHEDULE OF TRAFFIC CONTROL DEVICES INCLUDED IN THE PLANS. DRUMS OR VERTICAL PANELS SHALL BE USED TO DELINEATE THE LANE CLOSURE TAPER.
- TYPE III BARRICADE
- CONCRETE BARRIER (TEMPORARY)
- FLAGGER
- DIRECTION OF TRAVEL
- WORK AREA
- L TRANSITION TAPER LENGTH:
  - L = MINIMUM LENGTH OF TAPER
  - SPEED 45 MPH OR MORE: $L = S \times W$
  - SPEED 40 MPH OR LESS: $L = \frac{WS^2}{60}$
  - S = NUMERICAL VALUE OF SPEED LIMIT OR 85 PERCENTILE SPEED
  - W = WIDTH OF OFFSET
  - SHOULDER TAPER = 1/3 L
- TRUCK MOUNTED ATTENUATOR (TMA)
- CZ CLEAR ZONE (SEE GENERAL NOTE 16).
- FLASHING BEACON
- ▲ THESE DEVICES ARE OPTIONAL. THEIR NEED SHALL BE DETERMINED BY DETOUR DESIGN AND/OR SCOPE OF CONSTRUCTION ACTIVITY, AND ARE REQUIRED WHEN THEY ARE INCLUDED IN THE SCHEDULE OF CONSTRUCTION CONTROL DEVICES.
- VARIES BUFFER SPACE (SEE GENERAL NOTE 21 ON SHEET 1).
- ⬢ REQUIRED WHEN WORK OCCUPIES THE LOCATION FOR MORE THAN 3 DAYS.
- ★ SEE FINES DOUBLE SIGNING NOTES ON SHEET 12.
- ⬟ G20-11 SIGN IS REQUIRED WHEN SECTION 626 "PUBLIC INFORMATION SERVICES" PROJECT SPECIAL PROVISION WORKSHEET SPECIFICATION IS REQUIRED WITH PROJECT.

*KEY TO ADVANCE SIGNING DISTANCES

ROAD TYPE	DISTANCE BETWEEN SIGNS		
	A	B	C
URBAN (<=40 MPH)	100	100	100
URBAN (>=45 MPH)	350	350	350
RURAL	500	500	500
EXPRESSWAY/FREEWAY	1000	1500	2640

Computer File Information	
Creation Date: 07/04/12	Initials: RRR
Last Modification Date: 07/26/13	Initials: KEN
Full Path: www.coloradodot.info/library/traffic/traffic-s-standard-plans	
Drawing File Name: S-630-01_10of24.dgn	
CAD Ver.: MicroStation V8 Scale: Not to Scale	Units: English

	Sheet Revisions	
	Date:	Comments
R-4	07/26/13	CORRECTED SIGN CODE DESIGNATION FOR FLAGGER (SYMBOL) SIGN TO W20-7
R-X		
R-X		
R-X		

Colorado Department of Transportation
4201 East Arkansas Avenue
Denver, Colorado 80222
Phone: (303) 757-9543
Fax: (303) 757-9219
Safety & Traffic Engineering Branch KCM/KEN

TRAFFIC CONTROLS FOR HIGHWAY CONSTRUCTION

Issued By: Safety & Traffic Engineering Branch July 4, 2012

STANDARD PLAN NO.
S-630-1
Sheet No. 10 of 24

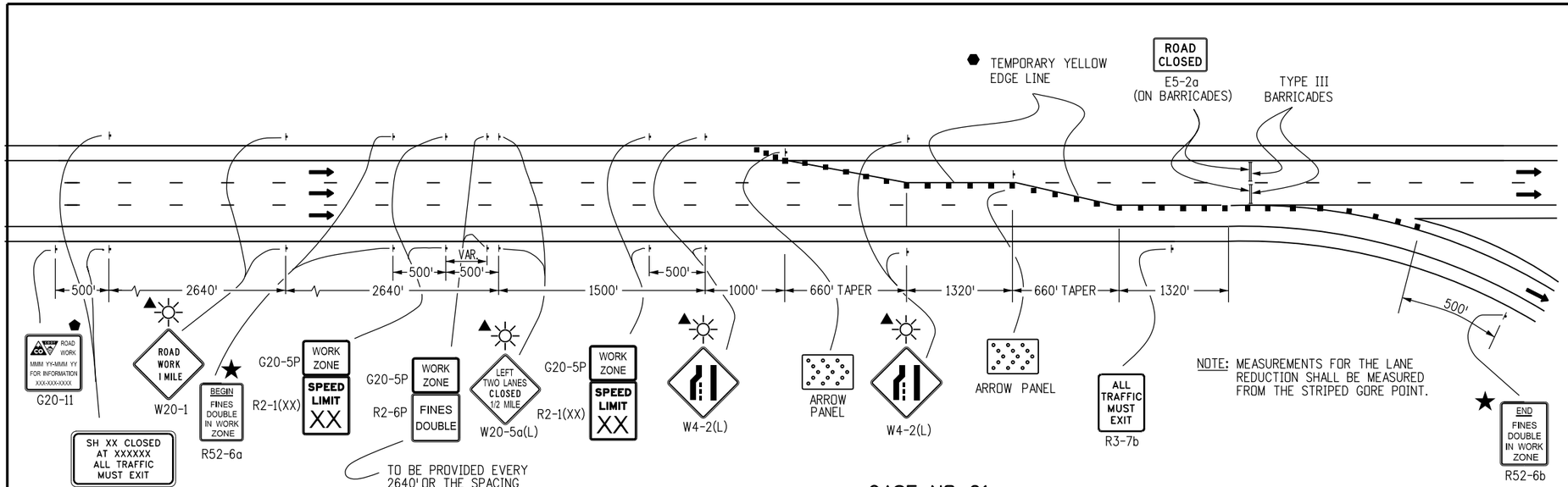

NOTE: MEASUREMENTS FOR THE LANE REDUCTION SHALL BE MEASURED FROM THE STRIPED GORE POINT.

CASE NO. 21
TYPICAL APPLICATION
FULL CLOSURE, MULTI-LANE FREEWAY

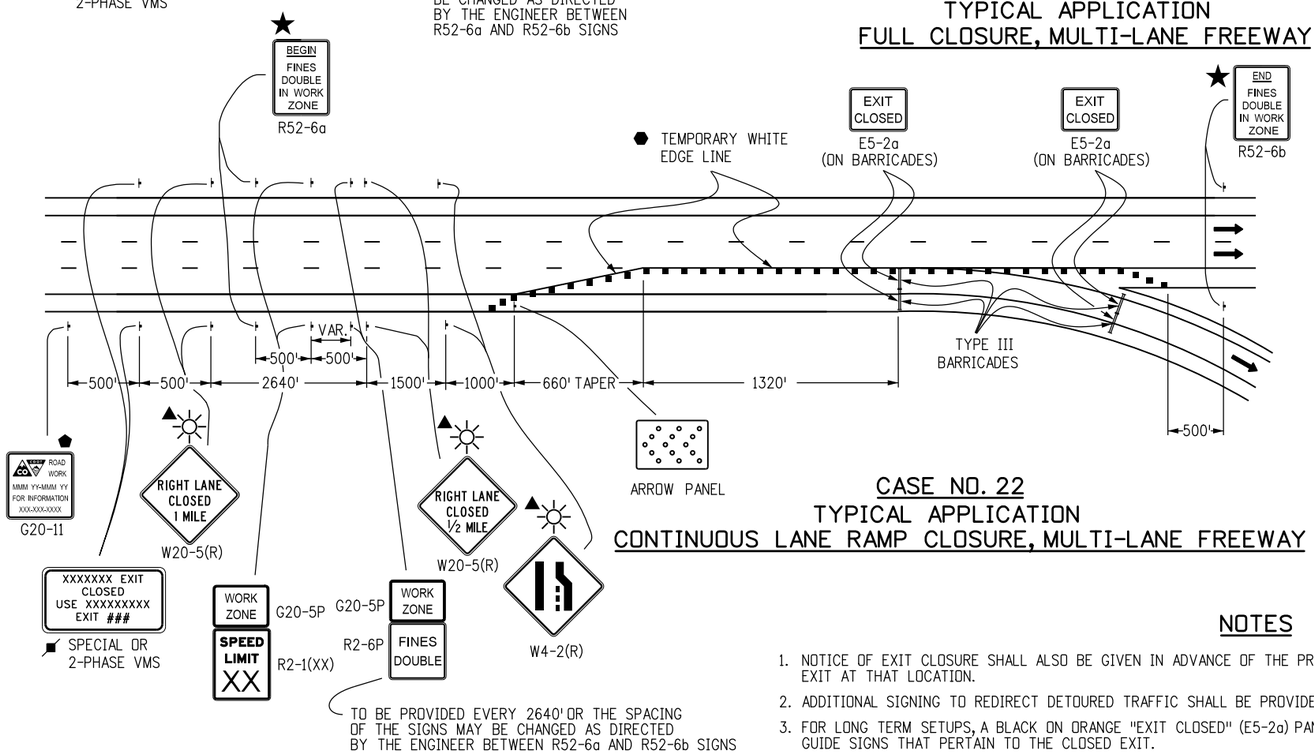

CASE NO. 22
TYPICAL APPLICATION
CONTINUOUS LANE RAMP CLOSURE, MULTI-LANE FREEWAY

LEGEND

- ADVANCE WARNING FLASHING OR SEQUENCING ARROW PANEL
- ▲ THESE DEVICES ARE OPTIONAL. THEIR NEED WILL BE DETERMINED BY THE DESIGNER BASED ON DETOUR DESIGN AND/OR SCOPE OF THE CONSTRUCTION ACTIVITY, AND ARE REQUIRED WHEN THEY ARE INCLUDED IN THE PLANS.
- ⬢ REQUIRED WHEN WORK OCCUPIES THE LOCATION FOR MORE THAN 3 DAYS.
- ⬟ G20-11 SIGN IS REQUIRED WHEN SECTION 626 "PUBLIC INFORMATION SERVICES" PROJECT SPECIAL PROVISION WORKSHEET SPECIFICATION IS REQUIRED WITH PROJECT.
- ■ CHANNELIZING DEVICE: FOR TYPE OF DEVICE TO BE USED, SEE SCHEDULE OF TRAFFIC CONTROL DEVICES INCLUDED IN THE PLANS. DRUMS OR VERTICAL PANELS SHALL BE USED TO DELINEATE THE LANE CLOSURE TAPER.
- TYPE III BARRICADE
- DIRECTION OF TRAVEL
- L TRANSITION TAPER LENGTH:
  - L = MINIMUM LENGTH OF TAPER
  - SPEED 45 MPH OR MORE: $L = S \times W$
  - SPEED 40 MPH OR LESS: $L = \frac{WS^2}{60}$
  - S = NUMERICAL VALUE OF SPEED LIMIT OR 85 PERCENTILE SPEED
  - W = WIDTH OF OFFSET
  - SHOULDER TAPER = 1/3 L
- CLOSURE AND EXIT MESSAGES ON SIGN LEGEND(S) SHOULD BE MODIFIED TO FIT THE SITUATION.
- FLASHING BEACON
- ★ SEE FINES DOUBLE SIGNING NOTES ON SHEET 12.

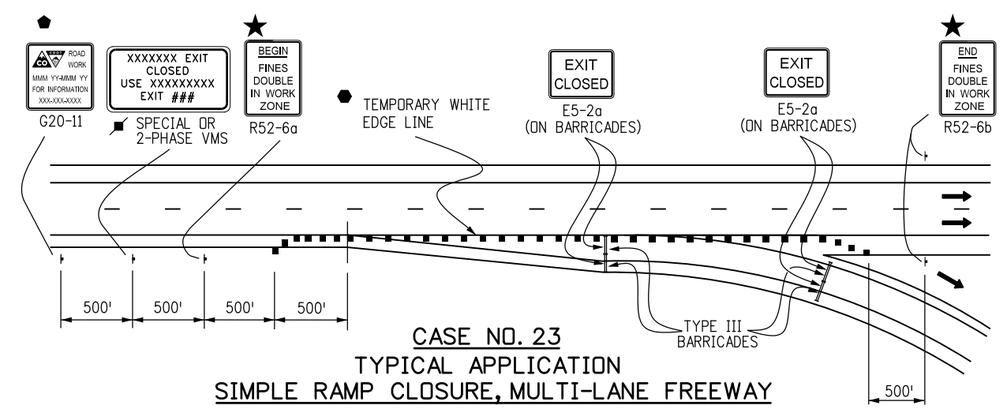

CASE NO. 23
TYPICAL APPLICATION
SIMPLE RAMP CLOSURE, MULTI-LANE FREEWAY

NOTES

1. NOTICE OF EXIT CLOSURE SHALL ALSO BE GIVEN IN ADVANCE OF THE PREVIOUS EXIT TO PROVIDE MOTORISTS WITH THE OPTION TO EXIT AT THAT LOCATION.
2. ADDITIONAL SIGNING TO REDIRECT DETOURED TRAFFIC SHALL BE PROVIDED FOR IN THE PROJECT'S METHOD OF HANDLING TRAFFIC.
3. FOR LONG TERM SETUPS, A BLACK ON ORANGE "EXIT CLOSED" (E5-2a) PANEL SHALL BE MOUNTED DIAGONALLY ACROSS ALL EXISTING GUIDE SIGNS THAT PERTAIN TO THE CLOSED EXIT.

Computer File Information		Sheet Revisions	
Creation Date: 07/04/12	Initials: KEN	Date:	Comments
Last Modification Date:	Initials:	R-X	
Full Path: www.coloradodot.info/library/traffic/traffic-s-standard-plans		R-X	
Drawing File Name: S-630-01_11of24.dgn		R-X	
CAD Ver.: MicroStation V8 Scale: Not to Scale Units: English		R-X	

Colorado Department of Transportation
4201 East Arkansas Avenue
Denver, Colorado 80222
Phone: (303) 757-9543
Fax: (303) 757-9219
Safety & Traffic Engineering Branch KCM/KEN

TRAFFIC CONTROLS FOR HIGHWAY CONSTRUCTION

Issued By: Safety & Traffic Engineering Branch July 4, 2012

STANDARD PLAN NO.
S-630-1
Sheet No. 11 of 24

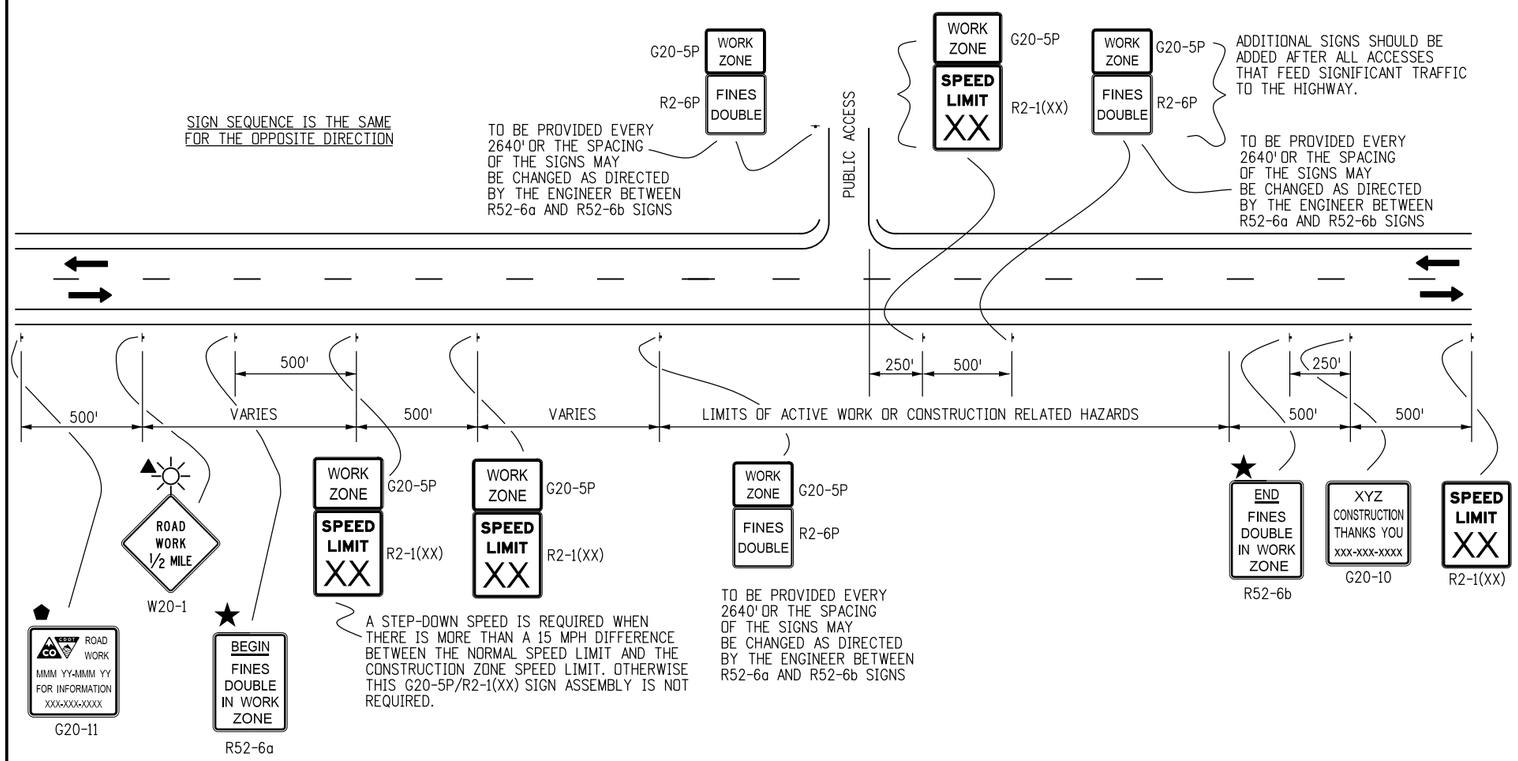

CASE NO. 24
TYPICAL APPLICATION
"FINES DOUBLE IN WORK ZONE" SIGNING
(WITH SPEED REDUCTION)

LEGEND

- DIRECTION OF TRAVEL
- THESE DEVICES ARE OPTIONAL. THEIR NEED WILL BE DETERMINED BY THE DESIGNER BASED ON DETOUR DESIGN AND/OR SCOPE OF THE CONSTRUCTION ACTIVITY, AND ARE REQUIRED WHEN THEY ARE INCLUDED IN THE PLANS.
- G20-11 SIGN IS REQUIRED WHEN SECTION 626 "PUBLIC INFORMATION SERVICES" PROJECT SPECIAL PROVISION WORKSHEET SPECIFICATION IS REQUIRED WITH PROJECT.
- FLASHING BEACON
- FINES DOUBLE SIGNING NOTES, SEE BELOW

FINES DOUBLE SIGNING NOTES:

1. SIGNS SHALL NOT BE PLACED SOONER THAN FOUR HOURS BEFORE WORK IS TO BEGIN AND SHALL BE REMOVED AS SOON AS WORK ACTIVITIES ARE CONCLUDED, UNLESS POTENTIAL HAZARDS INTRODUCED AS A RESULT OF THE WORK ARE STILL PRESENT AT THE END OF THE WORK DAY. IF SIGNS ARE LEFT IN PLACE AFTER WORK ACTIVITIES, THE TRAFFIC CONTROL SUPERVISOR SHALL MAKE AN ENTRY IN THEIR DAILY DIARY THAT JUSTIFIES THEIR USE.

   "HAZARDS" INCLUDE BUT ARE NOT LIMITED TO:
   - EDGE DROP OFFS
   - EQUIPMENT, WORKERS OR NON-SHIELDED OBJECTS IN THE CLEAR ZONE
   - ROUGH PAVEMENT
   - MAJOR CHANGE IN ALIGNMENT
   - REDUCED SHOULDER WIDTH
   - TEMPORARY GUARD RAIL OR BARRIER
   - LANE CLOSURE

2. SIGNS SHALL ONLY BE PLACED WHERE WORKERS ARE PRESENT IN THE ROADWAY OR CLEAR ZONE OR ARE AT RISK, OR WHERE THERE ARE HAZARDS IN THE TRAVELWAY, SHOULDERS OR CLEAR ZONE.

3. SIGNS SHOULD BE PLACED SO THAT MOTORISTS IMMEDIATELY ASSOCIATE THE SIGNS WITH PRESENT WORK ACTIVITIES. IF THE ZONE OF WORK ACTIVITY MOVES, THE SIGNS SHOULD BE MOVED ACCORDINGLY.

4. SIGNING SHOWN IS REQUIRED TO ENFORCE DOUBLE FINES IN A WORK ZONE. ADDITIONAL SIGNING SHALL BE IN ACCORDANCE WITH THAT NORMALLY REQUIRED FOR THE PARTICULAR WORK ZONE. PLACEMENT OF "FINES DOUBLE" SIGNING MAY BE ADJUSTED AS NEEDED TO PROVIDE A MINIMUM 250' SPACING BETWEEN OTHER SIGNING REQUIRED FOR THE SPECIFIC WORK ZONE SETUP.

Computer File Information		Sheet Revisions	
Creation Date: 07/04/12 Initials: RRR		Date:	Comments
Last Modification Date: Initials:	R-X		
Full Path: www.coloradodot.info/library/traffic/traffic-s-standard-plans	R-X		
Drawing File Name: S-630-01_12of24.dgn	R-X		
CAD Ver.: MicroStation V8 Scale: Not to Scale Units: English	R-X		

Colorado Department of Transportation
4201 East Arkansas Avenue
Denver, Colorado 80222
Phone: (303) 757-9543
Fax: (303) 757-9219
Safety & Traffic Engineering Branch KCM/KEN

TRAFFIC CONTROLS FOR HIGHWAY CONSTRUCTION

Issued By: Safety & Traffic Engineering Branch July 4, 2012

STANDARD PLAN NO.
S-630-1
Sheet No. 12 of 24

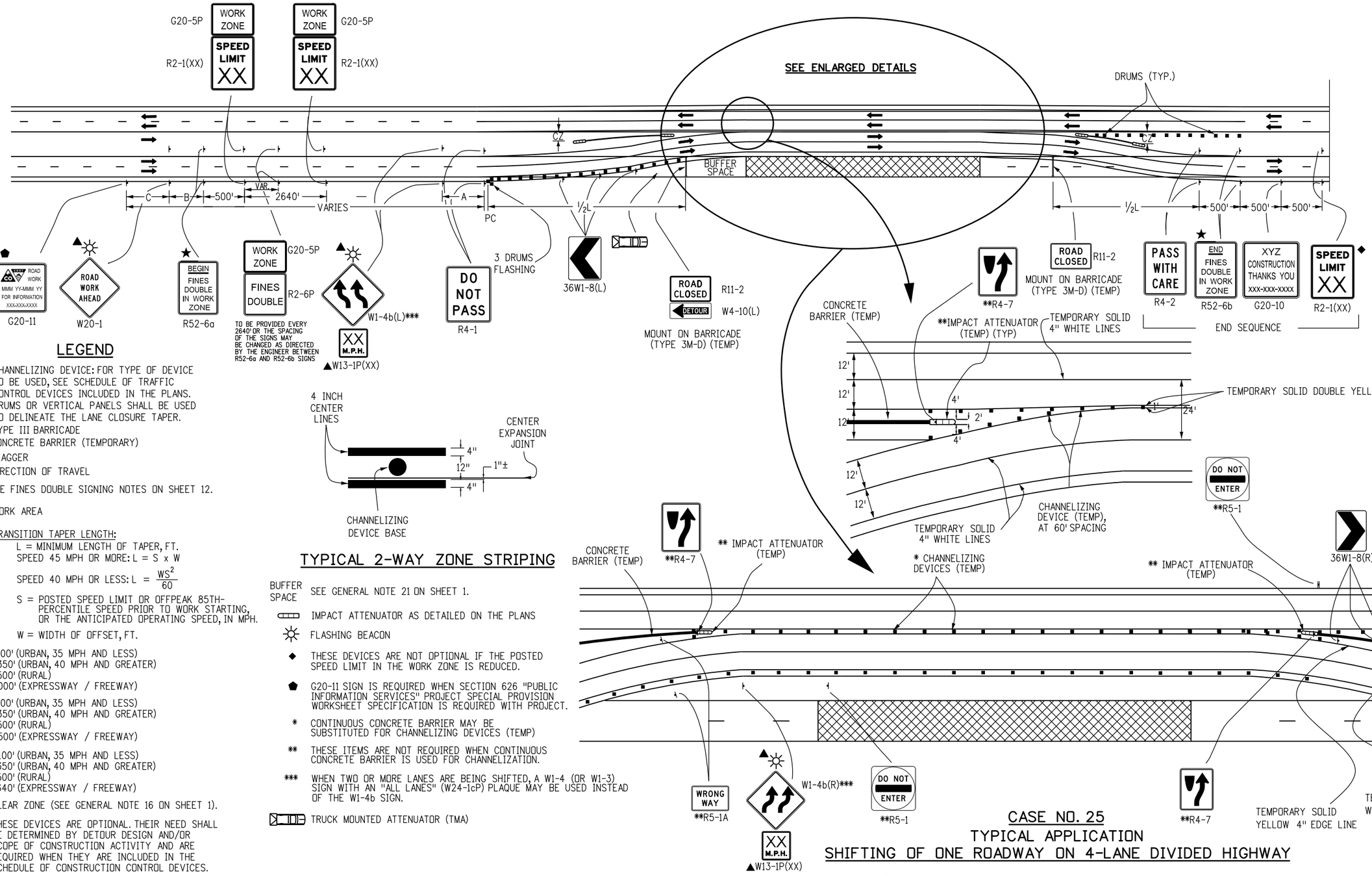

LEGEND

- ▪ CHANNELIZING DEVICE: FOR TYPE OF DEVICE TO BE USED, SEE SCHEDULE OF TRAFFIC CONTROL DEVICES INCLUDED IN THE PLANS. DRUMS OR VERTICAL PANELS SHALL BE USED TO DELINEATE THE LANE CLOSURE TAPER.
- TYPE III BARRICADE
- CONCRETE BARRIER (TEMPORARY)
- FLAGGER
- DIRECTION OF TRAVEL
- ★ SEE FINES DOUBLE SIGNING NOTES ON SHEET 12.
- WORK AREA

L TRANSITION TAPER LENGTH:

L = MINIMUM LENGTH OF TAPER, FT.

SPEED 45 MPH OR MORE: $L = S \times W$

SPEED 40 MPH OR LESS: $L = \frac{WS^2}{60}$

S = POSTED SPEED LIMIT OR OFFPEAK 85TH-PERCENTILE SPEED PRIOR TO WORK STARTING, OR THE ANTICIPATED OPERATING SPEED, IN MPH.

W = WIDTH OF OFFSET, FT.

A = 100' (URBAN, 35 MPH AND LESS)
350' (URBAN, 40 MPH AND GREATER)
500' (RURAL)
1,000' (EXPRESSWAY / FREEWAY)

B = 100' (URBAN, 35 MPH AND LESS)
350' (URBAN, 40 MPH AND GREATER)
500' (RURAL)
1,500' (EXPRESSWAY / FREEWAY)

C = 100' (URBAN, 35 MPH AND LESS)
350' (URBAN, 40 MPH AND GREATER)
500' (RURAL)
2,640' (EXPRESSWAY / FREEWAY)

CZ CLEAR ZONE (SEE GENERAL NOTE 16 ON SHEET 1).

▲ THESE DEVICES ARE OPTIONAL. THEIR NEED SHALL BE DETERMINED BY DETOUR DESIGN AND/OR SCOPE OF CONSTRUCTION ACTIVITY AND ARE REQUIRED WHEN THEY ARE INCLUDED IN THE SCHEDULE OF CONSTRUCTION CONTROL DEVICES.

TYPICAL 2-WAY ZONE STRIPING

BUFFER SPACE — SEE GENERAL NOTE 21 ON SHEET 1.

IMPACT ATTENUATOR AS DETAILED ON THE PLANS

FLASHING BEACON

◆ THESE DEVICES ARE NOT OPTIONAL IF THE POSTED SPEED LIMIT IN THE WORK ZONE IS REDUCED.

⬟ G20-11 SIGN IS REQUIRED WHEN SECTION 626 "PUBLIC INFORMATION SERVICES" PROJECT SPECIAL PROVISION WORKSHEET SPECIFICATION IS REQUIRED WITH PROJECT.

* CONTINUOUS CONCRETE BARRIER MAY BE SUBSTITUTED FOR CHANNELIZING DEVICES (TEMP)

** THESE ITEMS ARE NOT REQUIRED WHEN CONTINUOUS CONCRETE BARRIER IS USED FOR CHANNELIZATION.

*** WHEN TWO OR MORE LANES ARE BEING SHIFTED, A W1-4 (OR W1-3) SIGN WITH AN "ALL LANES" (W24-1cP) PLAQUE MAY BE USED INSTEAD OF THE W1-4b SIGN.

TRUCK MOUNTED ATTENUATOR (TMA)

CASE NO. 25
TYPICAL APPLICATION
SHIFTING OF ONE ROADWAY ON 4-LANE DIVIDED HIGHWAY

Computer File Information	
Creation Date: 07/04/12	Initials: RRR
Last Modification Date: 02/06/13	Initials: KEN
Full Path: www.coloradodot.info/library/traffic/traffic-s-standard-plans	
Drawing File Name: S-630-01_13of24.dgn	
CAD Ver.: MicroStation V8 Scale: Not to Scale Units: English	

	Sheet Revisions	
	Date:	Comments
R-1	02/06/13	UPDATE TO 2009 MUTCD STANDARD
R-X		
R-X		
R-X		

Colorado Department of Transportation
4201 East Arkansas Avenue
Denver, Colorado 80222
Phone: (303) 757-9543
Fax: (303) 757-9219
Safety & Traffic Engineering Branch KCM/KEN

TRAFFIC CONTROLS FOR HIGHWAY CONSTRUCTION

Issued By: Safety & Traffic Engineering Branch July 4, 2012

STANDARD PLAN NO.

S-630-1

Sheet No. 13 of 24

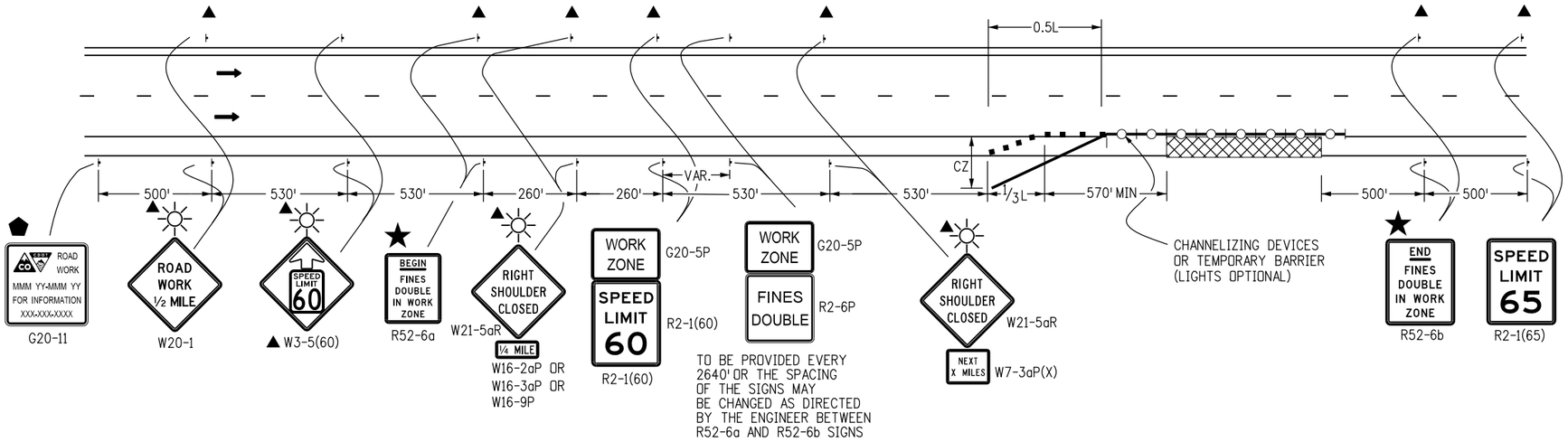

CASE NO. 26
TYPICAL APPLICATION
SHOULDER WORK - FREEWAY/EXPRESSWAY w/ 65 MPH SPEED LIMIT

WHEN HAZARDS (WORKERS, EQUIPMENT, OR TEMPORARY BARRIER) ARE WITHIN 8 FT OF TRAVEL WAY

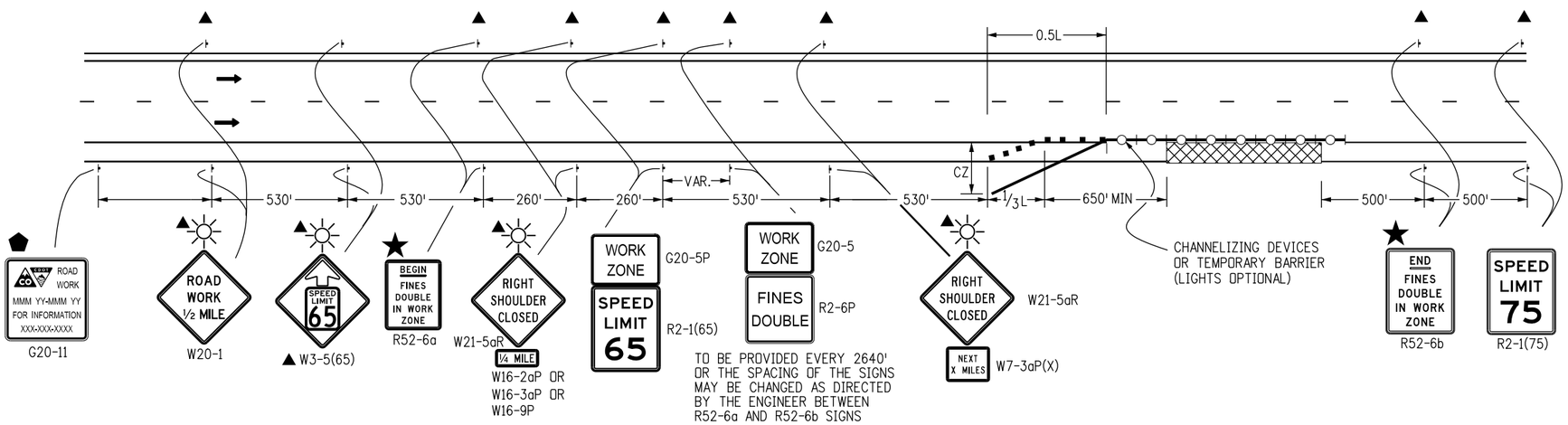

CASE NO. 27
TYPICAL APPLICATION
SHOULDER WORK - FREEWAY/EXPRESSWAY w/ 75 MPH SPEED LIMIT

WHEN HAZARDS (WORKERS, EQUIPMENT, OR TEMPORARY BARRIER) ARE WITHIN 10 FT OF TRAVEL WAY

LEGEND

- ■ CHANNELIZING DEVICE: FOR TYPE OF DEVICE TO BE USED, SEE SCHEDULE OF TRAFFIC CONTROL DEVICES INCLUDED IN THE PLANS. DRUMS OR VERTICAL PANELS SHALL BE USED TO DELINEATE THE LANE CLOSURE TAPER.
- TYPE III BARRICADE
- CONCRETE BARRIER (TEMPORARY)
- FLAGGER
- DIRECTION OF TRAVEL
- WORK AREA
- L TRANSITION TAPER LENGTH:
  - L = MINIMUM LENGTH OF TAPER
  - SPEED 45 MPH OR MORE: L = S x W
  - S = NUMERICAL VALUE OF SPEED LIMIT OR 85 PERCENTILE SPEED
  - W = WIDTH OF OFFSET
  - SHOULDER TAPER = 1/3 L
- ADVANCE WARNING FLASHING OR SEQUENCING ARROW PANEL
- CZ CLEAR ZONE (SEE GENERAL NOTE 16 ON SHEET 1).
- ▲ THESE DEVICES ARE OPTIONAL. THEIR NEED SHALL BE DETERMINED BY TRAFFIC VOLUMES AND/OR SCOPE OF CONSTRUCTION ACTIVITY, AND ARE REQUIRED WHEN THEY ARE INCLUDED IN THE SCHEDULE OF CONSTRUCTION CONTROL DEVICES.
- ⬟ G20-11 SIGN IS REQUIRED WHEN SECTION 626 "PUBLIC INFORMATION SERVICES" PROJECT SPECIAL PROVISION WORKSHEET SPECIFICATION IS REQUIRED WITH PROJECT.
- ⬢ REQUIRED WHEN WORK OCCUPIES THE LOCATION FOR MORE THAN 3 DAYS.
- TRUCK MOUNTED ATTENUATOR
- FLASHING BEACON
- ★ SEE FINES DOUBLE SIGNING NOTES ON SHEET 12.

Computer File Information		Sheet Revisions	
Creation Date: 07/04/12 Initials: RRR		Date:	Comments
Last Modification Date: Initials:	R-X		
Full Path: www.coloradodot.info/library/traffic/traffic-s-standard-plans	R-X		
Drawing File Name: S-630-01_14of24.dgn	R-X		
CAD Ver.: MicroStation V8 Scale: Not to Scale Units: English	R-X		

Colorado Department of Transportation
4201 East Arkansas Avenue
Denver, Colorado 80222
Phone: (303) 757-9543
Fax: (303) 757-9219
Safety & Traffic Engineering Branch KCM/KEN

TRAFFIC CONTROLS FOR HIGHWAY CONSTRUCTION

Issued By: Safety & Traffic Engineering Branch July 4, 2012

STANDARD PLAN NO.
S-630-1
Sheet No. 14 of 24

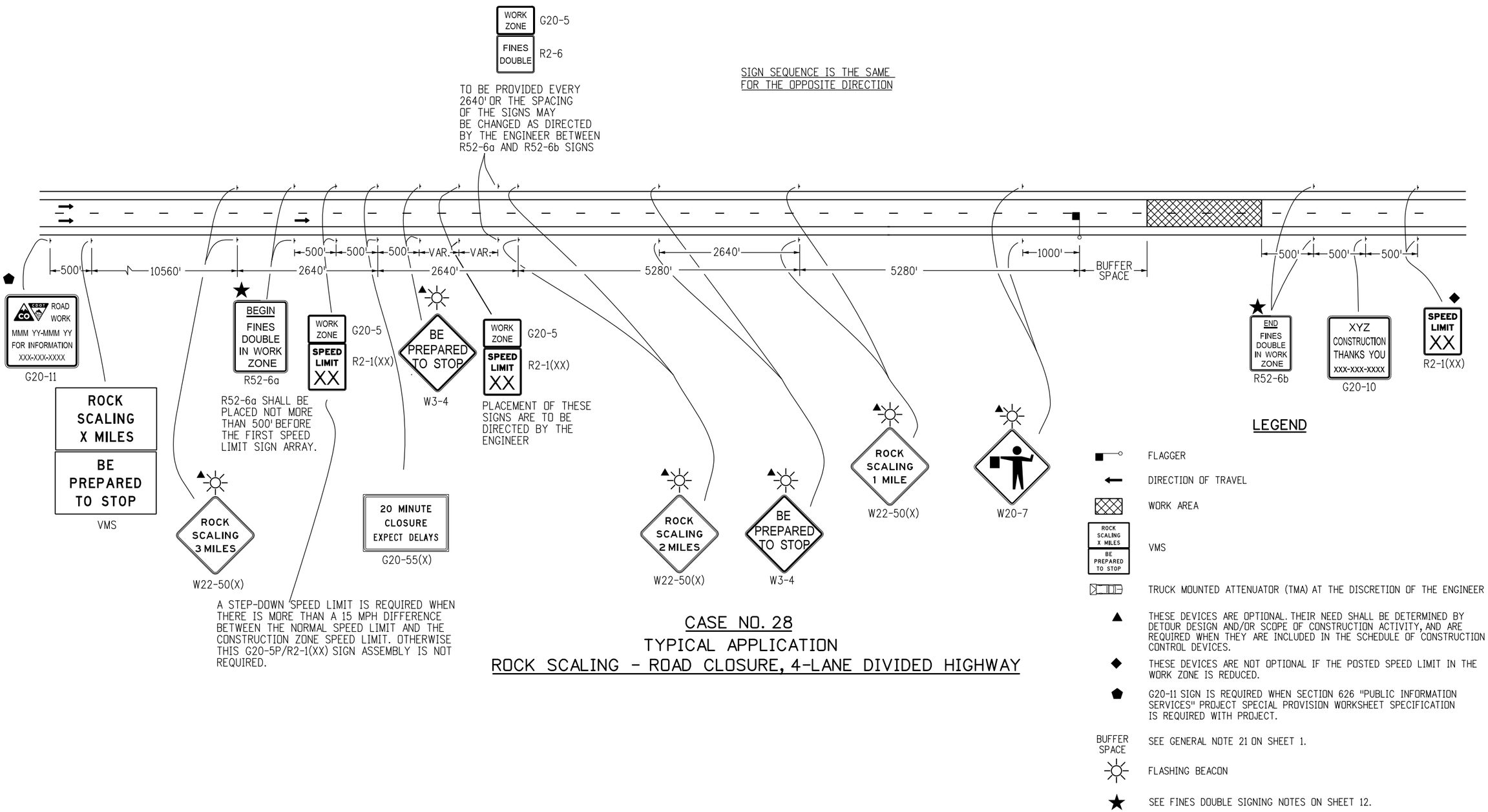

LEGEND

- FLAGGER
- DIRECTION OF TRAVEL
- WORK AREA
- VMS (ROCK SCALING X MILES / BE PREPARED TO STOP)
- TRUCK MOUNTED ATTENUATOR (TMA) AT THE DISCRETION OF THE ENGINEER
- ▲ THESE DEVICES ARE OPTIONAL. THEIR NEED SHALL BE DETERMINED BY DETOUR DESIGN AND/OR SCOPE OF CONSTRUCTION ACTIVITY, AND ARE REQUIRED WHEN THEY ARE INCLUDED IN THE SCHEDULE OF CONSTRUCTION CONTROL DEVICES.
- ◆ THESE DEVICES ARE NOT OPTIONAL IF THE POSTED SPEED LIMIT IN THE WORK ZONE IS REDUCED.
- ⬟ G20-11 SIGN IS REQUIRED WHEN SECTION 626 "PUBLIC INFORMATION SERVICES" PROJECT SPECIAL PROVISION WORKSHEET SPECIFICATION IS REQUIRED WITH PROJECT.
- BUFFER SPACE — SEE GENERAL NOTE 21 ON SHEET 1.
- FLASHING BEACON
- ★ SEE FINES DOUBLE SIGNING NOTES ON SHEET 12.

CASE NO. 28
TYPICAL APPLICATION
ROCK SCALING - ROAD CLOSURE, 4-LANE DIVIDED HIGHWAY

Computer File Information	
Creation Date: 07/04/12	Initials: RRR
Last Modification Date: 07/26/13	Initials: KEN
Full Path: www.coloradodot.info/library/traffic/traffic-s-standard-plans	
Drawing File Name: S-630-01_15of24.dgn	
CAD Ver.: MicroStation V8 Scale: Not to Scale	Units: English

	Sheet Revisions	
	Date:	Comments
R-4	07/26/13	CORRECTED SIGN CODE DESIGNATION FOR FLAGGER (SYMBOL) SIGN TO W20-7
R-X		
R-X		
R-X		

Colorado Department of Transportation
4201 East Arkansas Avenue
Denver, Colorado 80222
Phone: (303) 757-9543
Fax: (303) 757-9219
Safety & Traffic Engineering Branch KCM/KEN

TRAFFIC CONTROLS FOR HIGHWAY CONSTRUCTION

Issued By: Safety & Traffic Engineering Branch July 4, 2012

STANDARD PLAN NO.
S-630-1
Sheet No. 15 of 24

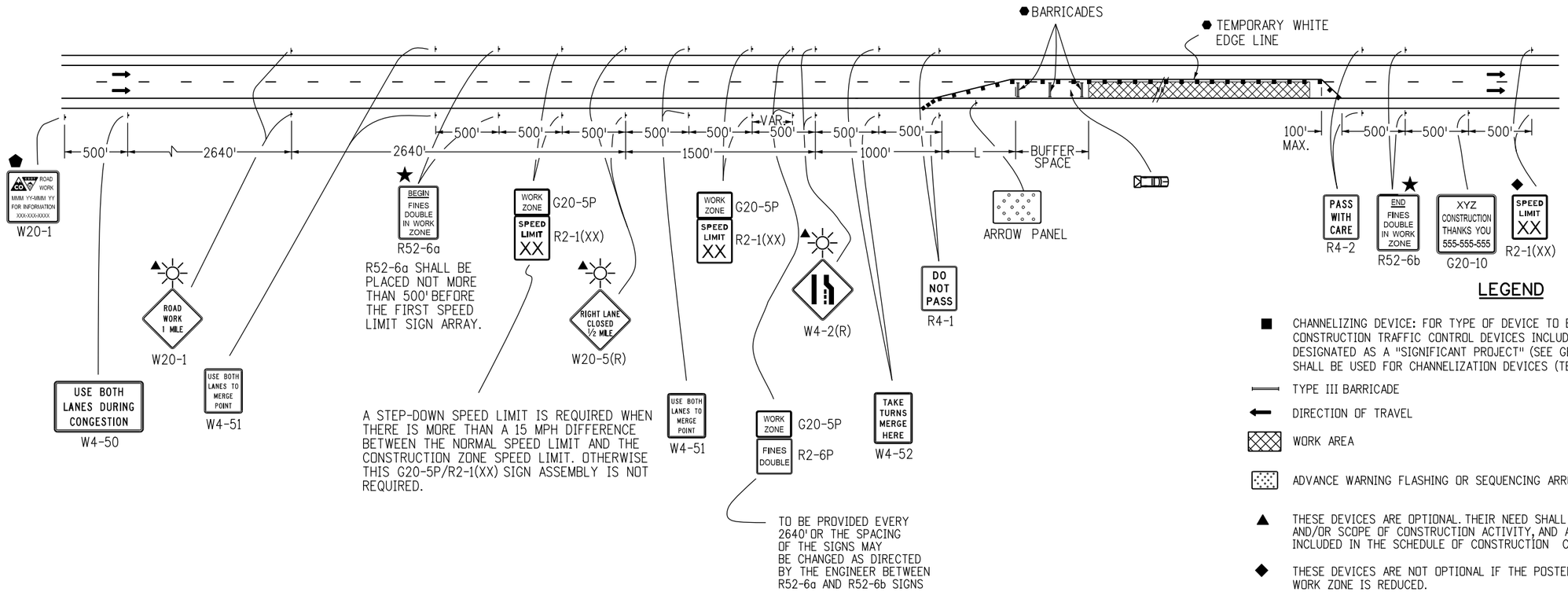

LEGEND

■ CHANNELIZING DEVICE: FOR TYPE OF DEVICE TO BE USED, SEE THE SCHEDULE OF CONSTRUCTION TRAFFIC CONTROL DEVICES INCLUDED IN THE PLANS. IF PROJECT IS DESIGNATED AS A "SIGNIFICANT PROJECT" (SEE GENERAL NOTE 25), CONCRETE BARRIER SHALL BE USED FOR CHANNELIZATION DEVICES (TEMP) AS DETERMINED BY THE ENGINEER.

TYPE III BARRICADE

DIRECTION OF TRAVEL

WORK AREA

ADVANCE WARNING FLASHING OR SEQUENCING ARROW PANEL.

▲ THESE DEVICES ARE OPTIONAL. THEIR NEED SHALL BE DETERMINED BY DETOUR DESIGN AND/OR SCOPE OF CONSTRUCTION ACTIVITY, AND ARE REQUIRED WHEN THEY ARE INCLUDED IN THE SCHEDULE OF CONSTRUCTION CONTROL DEVICES.

◆ THESE DEVICES ARE NOT OPTIONAL IF THE POSTED SPEED LIMIT IN THE WORK ZONE IS REDUCED.

⬟ G20-11 SIGN IS REQUIRED WHEN SECTION 626 "PUBLIC INFORMATION INFORMATION SERVICES" PROJECT SPECIAL PROVISION WORKSHEET SPECIFICATION IS REQUIRED WITH PROJECT.

FLASHING BEACON

● REQUIRED WHEN WORK OCCUPIES THE LOCATION FOR MORE THAN 3 DAYS.

★ SEE FINES DOUBLE SIGNING NOTES ON SHEET 12.

TRUCK MOUNTED ATTENUATOR (TMA)

L TRANSITION TAPER LENGTH:

L = MINIMUM LENGTH OF TAPER

SPEED 45 MPH OR MORE: $L = S \times W$

SPEED 40 MPH OR LESS: $L = \frac{WS^2}{60}$

S = NUMERICAL VALUE OF SPEED LIMIT OR 85 PERCENTILE SPEED

W = WIDTH OF OFFSET

SHOULDER TAPER = 1/3 L

BUFFER SPACE SEE GENERAL NOTE 21 ON SHEET 1.

CASE NO. 29
TYPICAL APPLICATION
LATE MERGING - ONE LANE CLOSED, 4-LANE DIVIDED HIGHWAY

Computer File Information	
Creation Date: 07/04/12	Initials: RRR
Last Modification Date:	Initials:
Full Path: www.coloradodot.info/library/traffic/traffic-s-standard-plans	
Drawing File Name: S-630-01_16of24.dgn	
CAD Ver.: MicroStation V8 Scale: Not to Scale Units: English	

Sheet Revisions	
Date:	Comments
R-X	
R-X	
R-X	
R-X	

Colorado Department of Transportation
4201 East Arkansas Avenue
Denver, Colorado 80222
Phone: (303) 757-9543
Fax: (303) 757-9219
Safety & Traffic Engineering Branch KCM/KEN

TRAFFIC CONTROLS FOR HIGHWAY CONSTRUCTION

Issued By: Safety & Traffic Engineering Branch July 4, 2012

STANDARD PLAN NO.
S-630-1
Sheet No. 16 of 24

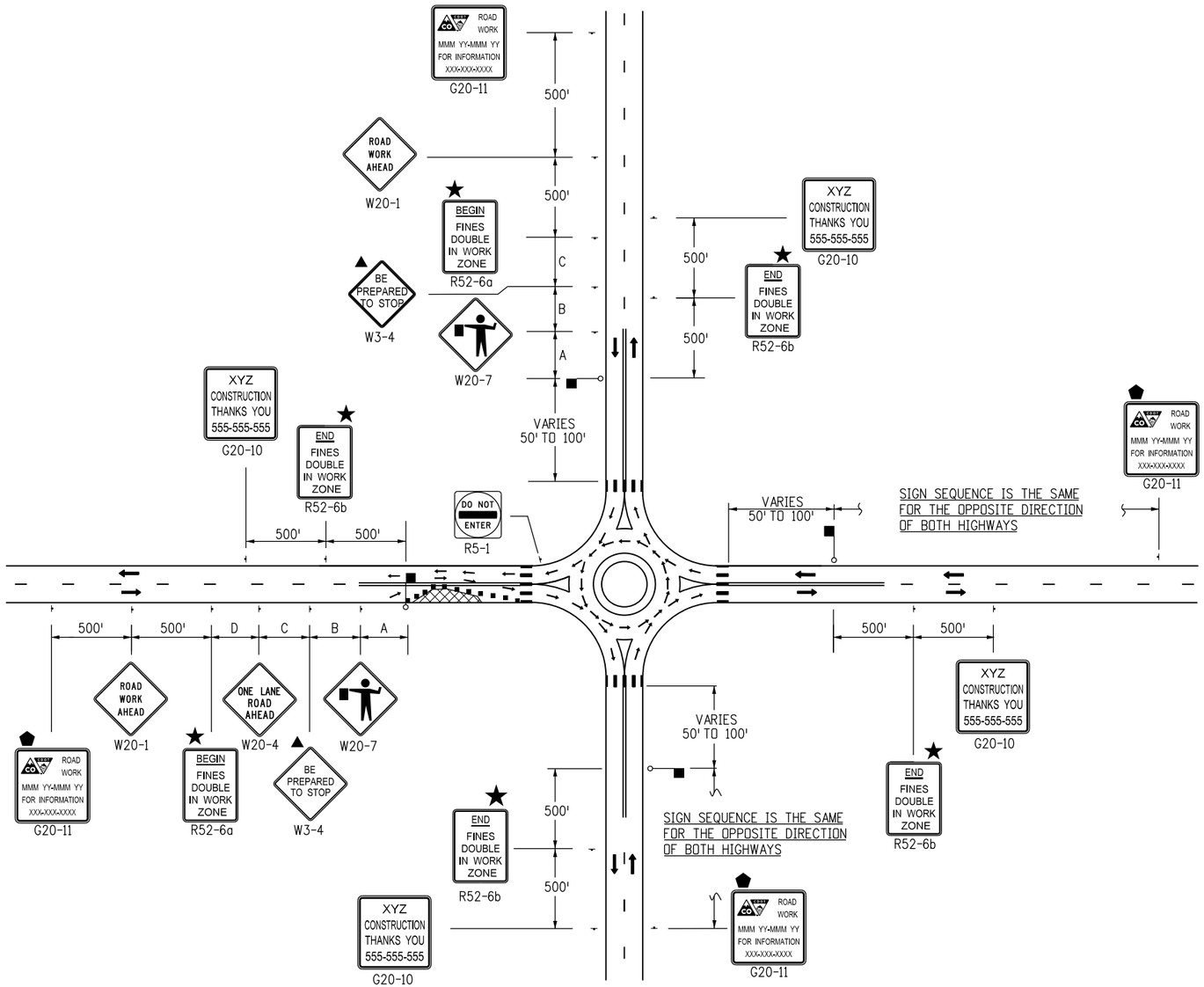

CASE NO. 30
TYPICAL APPLICATION
ROUNDABOUT - PARTIAL CLOSURE NEAR ONE-LANE ROUNDABOUT

LEGEND

- ■ CHANNELIZING DEVICE: FOR TYPE OF DEVICE TO BE USED, SEE THE SCHEDULE OF CONSTRUCTION TRAFFIC CONTROL DEVICES INCLUDED IN THE PLANS. IF PROJECT IS DESIGNATED AS A "SIGNIFICANT PROJECT" (SEE GENERAL NOTE 25), CONCRETE BARRIER SHALL BE USED FOR CHANNELIZATION DEVICES (TEMP) AS DETERMINED BY THE ENGINEER.
- TYPE III BARRICADE
- DIRECTION OF TRAVEL
- WORK AREA
- ADVANCE WARNING FLASHING OR SEQUENCING ARROW PANEL.
- ▲ THESE DEVICES ARE OPTIONAL. THEIR NEED SHALL BE DETERMINED BY DETOUR DESIGN AND/OR SCOPE OF CONSTRUCTION ACTIVITY, AND ARE REQUIRED WHEN THEY ARE INCLUDED IN THE SCHEDULE OF CONSTRUCTION CONTROL DEVICES.
- ◆ THESE DEVICES ARE NOT OPTIONAL IF THE POSTED SPEED LIMIT IN THE WORK ZONE IS REDUCED.
- ⬟ G20-11 SIGN IS REQUIRED WHEN SECTION 626 "PUBLIC INFORMATION INFORMATION SERVICES" PROJECT SPECIAL PROVISION WORKSHEET SPECIFICATION IS REQUIRED WITH PROJECT.
- FLASHING BEACON
- ⬢ REQUIRED WHEN WORK OCCUPIES THE LOCATION FOR MORE THAN 3 DAYS.
- ★ SEE FINES DOUBLE SIGNING NOTES ON SHEET 12.
- TRUCK MOUNTED ATTENUATOR (TMA)
- L TRANSITION TAPER LENGTH:

L = MINIMUM LENGTH OF TAPER

SPEED 45 MPH OR MORE: $L = S \times W$

SPEED 40 MPH OR LESS: $L = \frac{WS^2}{60}$

S = NUMERICAL VALUE OF SPEED LIMIT OR 85 PERCENTILE SPEED

W = WIDTH OF OFFSET

SHOULDER TAPER = 1/3 L

- BUFFER SPACE — SEE GENERAL NOTE 21 ON SHEET 1.
- FLAGGER

ROAD TYPE	DISTANCE BETWEEN SIGNS		
	A	B	C
URBAN (<=40 MPH)	100	100	100
URBAN (>=45 MPH)	350	350	350
RURAL	500	500	500
EXPRESSWAY/FREEWAY	1000	1500	2640

Computer File Information	
Creation Date: 07/04/12	Initials: KEN
Last Modification Date: 12/08/14	Initials: KEN
Full Path: www.coloradodot.info/library/traffic/traffic-s-standard-plans	
Drawing File Name: S-630-01_17of24.dgn	
CAD Ver.: MicroStation V8 Scale: Not to Scale Units: English	

	Sheet Revisions	
	Date:	Comments
R-7	12/08/14	NEW SHEET 17. OLD SHEET 17 NOW SHEET 21
R-X		
R-X		
R-X		

Colorado Department of Transportation
4201 East Arkansas Avenue
Denver, Colorado 80222
Phone: (303) 757-9543
Fax: (303) 757-9219
Safety & Traffic Engineering Branch KCM/KEN

TRAFFIC CONTROLS FOR HIGHWAY CONSTRUCTION

Issued By: Safety & Traffic Engineering Branch July 4, 2012

STANDARD PLAN NO.
S-630-1
Sheet No. 17 of 24

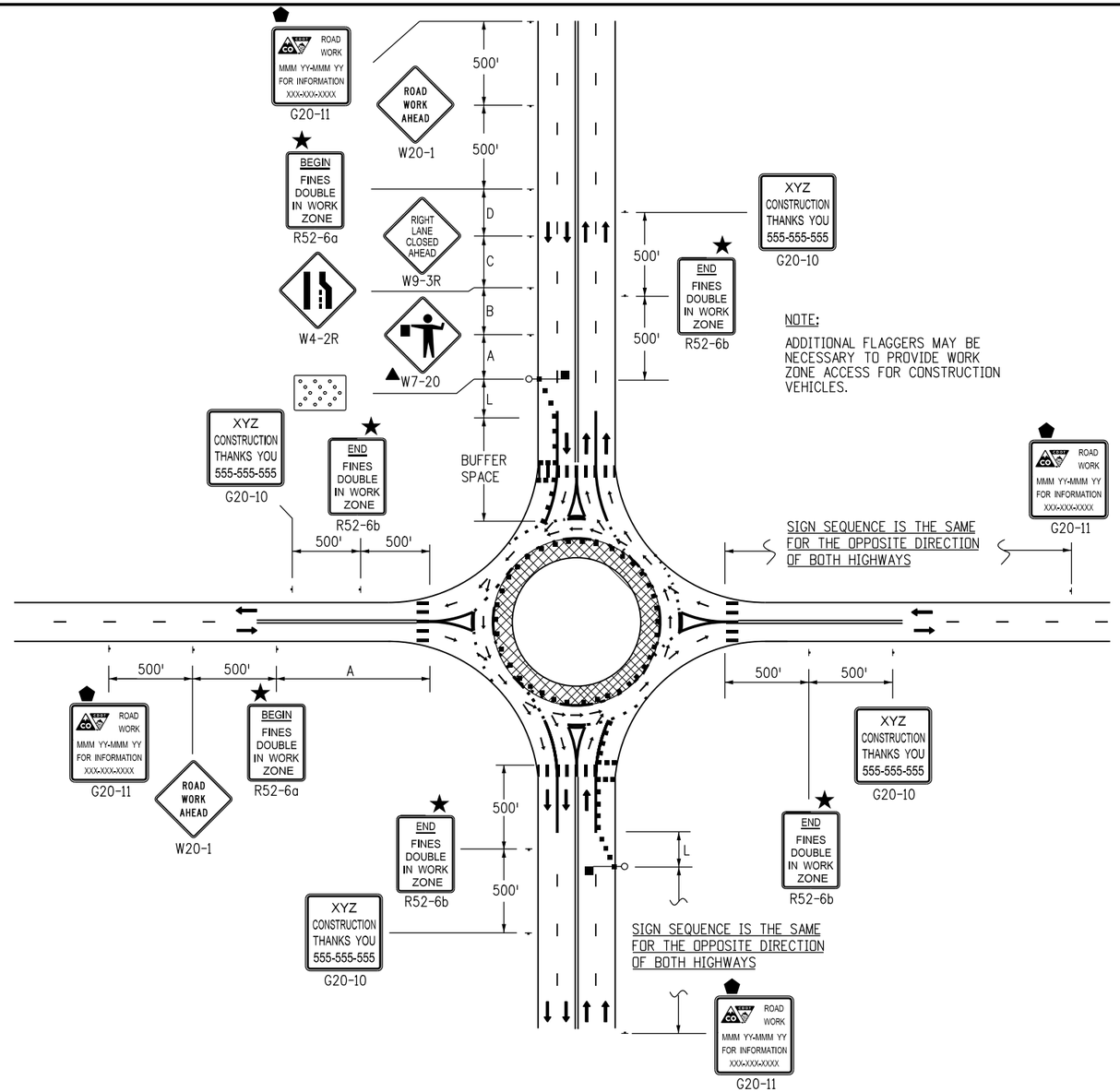

CASE NO. 31
TYPICAL APPLICATION *
ROUNDABOUT - INSIDE LANE CLOSURE FOR TWO-LANE ROUNDABOUT

LEGEND

* A TRUCK DETOUR ROUTE MAY BE NECESSARY TO DIVERT TRUCKS AWAY FROM THE ROUNDABOUT CIRCLE. ALSO NECESSARY IS A STREET NAME AND/OR ROUTE NUMBER SIGN, INFORMING MOTORISTS WHERE THEY NEED TO EXIT THE ROUNDABOUT CIRCLE TO ENTER THE DESIRED STREET AND/OR ROUTE NUMBER.

■ CHANNELIZING DEVICE: FOR TYPE OF DEVICE TO BE USED, SEE THE SCHEDULE OF CONSTRUCTION TRAFFIC CONTROL DEVICES INCLUDED IN THE PLANS. IF PROJECT IS DESIGNATED AS A "SIGNIFICANT PROJECT" (SEE GENERAL NOTE 25), CONCRETE BARRIER SHALL BE USED FOR CHANNELIZATION DEVICES (TEMP) AS DETERMINED BY THE ENGINEER.

TYPE III BARRICADE

DIRECTION OF TRAVEL

WORK AREA

ADVANCE WARNING FLASHING OR SEQUENCING ARROW PANEL.

▲ THESE DEVICES ARE OPTIONAL. THEIR NEED SHALL BE DETERMINED BY DETOUR DESIGN AND/OR SCOPE OF CONSTRUCTION ACTIVITY, AND ARE REQUIRED WHEN THEY ARE INCLUDED IN THE SCHEDULE OF CONSTRUCTION CONTROL DEVICES.

◆ THESE DEVICES ARE NOT OPTIONAL IF THE POSTED SPEED LIMIT IN THE WORK ZONE IS REDUCED.

⬟ G20-11 SIGN IS REQUIRED WHEN SECTION 626 "PUBLIC INFORMATION INFORMATION SERVICES" PROJECT SPECIAL PROVISION WORKSHEET SPECIFICATION IS REQUIRED WITH PROJECT.

FLASHING BEACON

⬢ REQUIRED WHEN WORK OCCUPIES THE LOCATION FOR MORE THAN 3 DAYS.

★ SEE FINES DOUBLE SIGNING NOTES ON SHEET 12.

TRUCK MOUNTED ATTENUATOR (TMA)

L TRANSITION TAPER LENGTH:

L = MINIMUM LENGTH OF TAPER

SPEED 45 MPH OR MORE: $L = S^2 W$

SPEED 40 MPH OR LESS: $L = S W$

S = NUMERICAL VALUE OF SPEED LIMIT OR 85 PERCENTILE SPEED

W = WIDTH OF OFFSET

SHOULDER TAPER = 1/3 L

BUFFER SPACE SEE GENERAL NOTE 21 ON SHEET 1.

FLAGGER

ROAD TYPE	DISTANCE BETWEEN SIGNS		
	A	B	C
URBAN (<=40 MPH)	100	100	100
URBAN (>=45 MPH)	350	350	350
RURAL	500	500	500
EXPRESSWAY/FREEWAY	1000	1500	2640

Computer File Information	
Creation Date: 07/04/12	Initials: KEN
Last Modification Date: 12/08/14	Initials: KEN
Full Path: www.coloradodot.info/library/traffic/traffic-s-standard-plans	
Drawing File Name: S-630-01_18of24.dgn	
CAD Ver.: MicroStation V8 Scale: Not to Scale Units: English	

	Sheet Revisions	
	Date:	Comments
R-7	12/08/14	NEW SHEET 18. OLD SHEET 18 NOW SHEET 22
R-X		
R-X		
R-X		

Colorado Department of Transportation
4201 East Arkansas Avenue
Denver, Colorado 80222
Phone: (303) 757-9543
Fax: (303) 757-9219
Safety & Traffic Engineering Branch KCM/KEN

TRAFFIC CONTROLS FOR HIGHWAY CONSTRUCTION

Issued By: Safety & Traffic Engineering Branch July 4, 2012

STANDARD PLAN NO.
S-630-1
Sheet No. 18 of 24

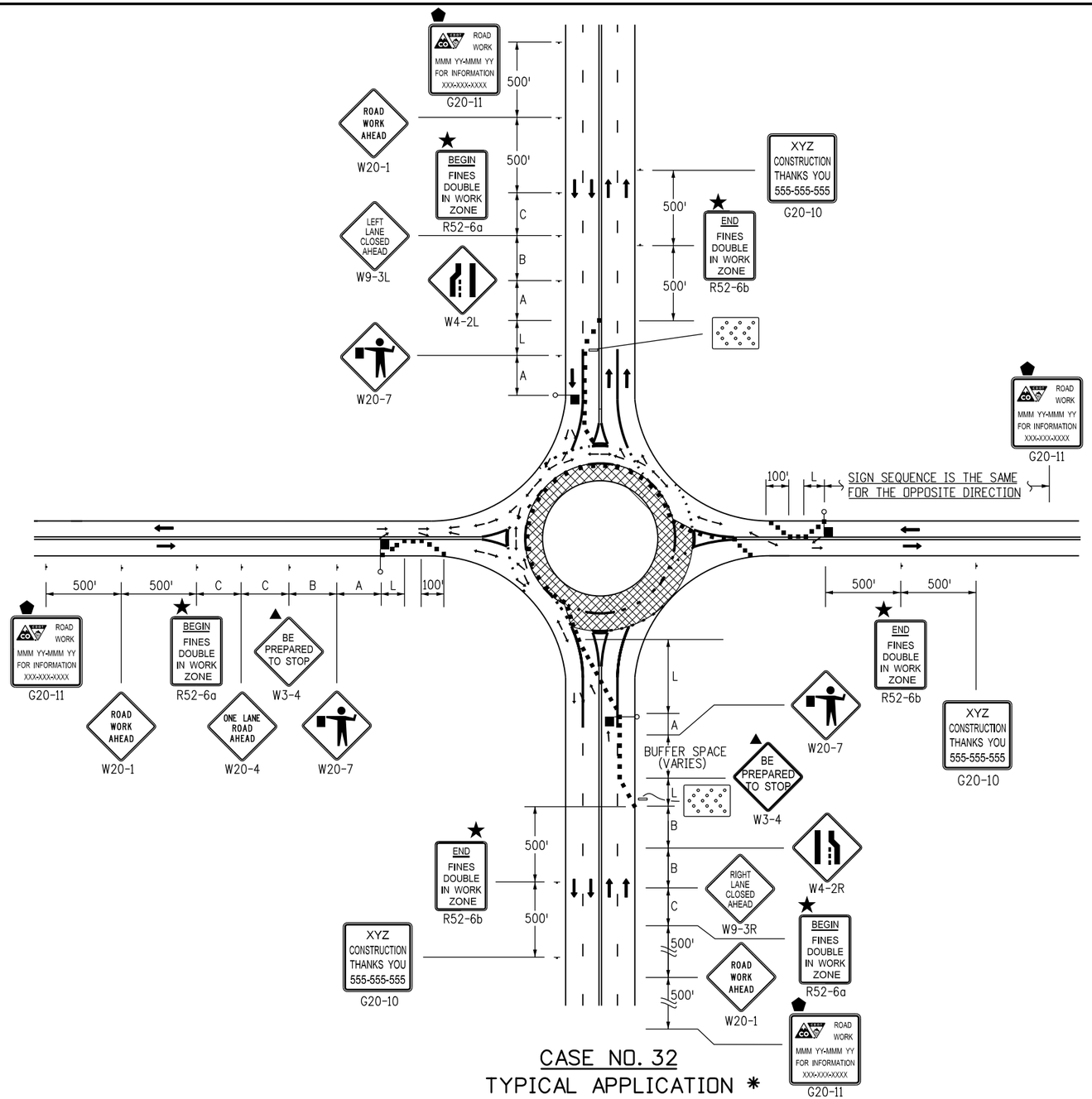

CASE NO. 32

TYPICAL APPLICATION *

ROUNDABOUT - OUTSIDE LANE CLOSURE FOR TWO-LANE ROUNDABOUT

LEGEND

* A TRUCK DETOUR ROUTE MAY BE NECESSARY TO DIVERT TRUCKS AWAY FROM THE ROUNDABOUT CIRCLE. ALSO NECESSARY IS A STREET NAME AND/OR ROUTE NUMBER SIGN, INFORMING MOTORISTS WHERE THEY NEED TO EXIT THE ROUNDABOUT CIRCLE TO ENTER THE DESIRED STREET AND/OR ROUTE NUMBER.

■ CHANNELIZING DEVICE: FOR TYPE OF DEVICE TO BE USED, SEE THE SCHEDULE OF CONSTRUCTION TRAFFIC CONTROL DEVICES INCLUDED IN THE PLANS. IF PROJECT IS DESIGNATED AS A "SIGNIFICANT PROJECT" (SEE GENERAL NOTE 25), CONCRETE BARRIER SHALL BE USED FOR CHANNELIZATION DEVICES (TEMP) AS DETERMINED BY THE ENGINEER.

TYPE III BARRICADE

DIRECTION OF TRAVEL

WORK AREA

ADVANCE WARNING FLASHING OR SEQUENCING ARROW PANEL.

▲ THESE DEVICES ARE OPTIONAL. THEIR NEED SHALL BE DETERMINED BY DETOUR DESIGN AND/OR SCOPE OF CONSTRUCTION ACTIVITY, AND ARE REQUIRED WHEN THEY ARE INCLUDED IN THE SCHEDULE OF CONSTRUCTION CONTROL DEVICES.

◆ THESE DEVICES ARE NOT OPTIONAL IF THE POSTED SPEED LIMIT IN THE WORK ZONE IS REDUCED.

⬟ G20-11 SIGN IS REQUIRED WHEN SECTION 626 "PUBLIC INFORMATION INFORMATION SERVICES" PROJECT SPECIAL PROVISION WORKSHEET SPECIFICATION IS REQUIRED WITH PROJECT.

FLASHING BEACON

⬢ REQUIRED WHEN WORK OCCUPIES THE LOCATION FOR MORE THAN 3 DAYS.

★ SEE FINES DOUBLE SIGNING NOTES ON SHEET 12.

TRUCK MOUNTED ATTENUATOR (TMA)

L TRANSITION TAPER LENGTH: =

L = MINIMUM LENGTH OF TAPER $= \frac{WS^2}{60}$

SPEED 45 MPH OR MORE: L $= S \times W$

SPEED 40 MPH OR LESS: L

S = NUMERICAL VALUE OF SPEED LIMIT OR 85 PERCENTILE SPEED

W = WIDTH OF OFFSET

SHOULDER TAPER = 1/3 L

BUFFER SPACE — SEE GENERAL NOTE 21 ON SHEET 1.

FLAGGER

ROAD TYPE	DISTANCE BETWEEN SIGNS		
	A	B	C
URBAN (<=40 MPH)	100	100	100
URBAN (>=45 MPH)	350	350	350
RURAL	500	500	500
EXPRESSWAY/FREEWAY	1000	1500	2640

Computer File Information	
Creation Date: 07/04/12	Initials: KEN
Last Modification Date: 12/08/14	Initials: KEN
Full Path: www.coloradodot.info/library/traffic/traffic-s-standard-plans	
Drawing File Name: S-630-01_19of24.dgn	
CAD Ver.: MicroStation V8 Scale: Not to Scale Units: English	

	Sheet Revisions	
	Date:	Comments
R-7	12/08/14	NEW SHEET 19. OLD SHEET 19 NOW SHEET 23
R-X		
R-X		
R-X		

Colorado Department of Transportation
4201 East Arkansas Avenue
Denver, Colorado 80222
Phone: (303) 757-9543
Fax: (303) 757-9219
Safety & Traffic Engineering Branch KCM/KEN

TRAFFIC CONTROLS FOR HIGHWAY CONSTRUCTION

Issued By: Safety & Traffic Engineering Branch July 4, 2012

STANDARD PLAN NO.

S-630-1

Sheet No. 19 of 24

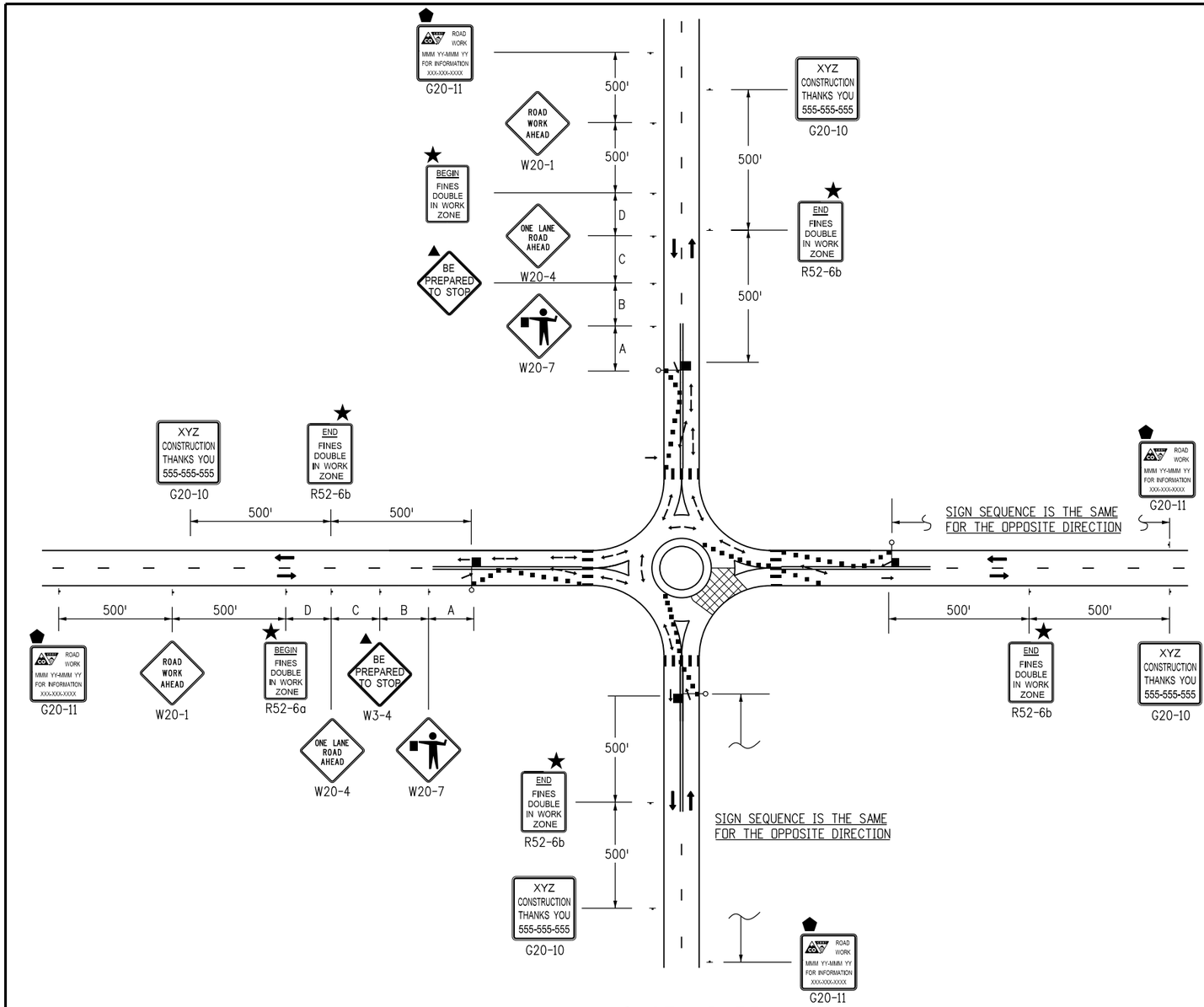

CASE NO. 33
TYPICAL APPLICATION *
ROUNDABOUT - PARTIAL CLOSURE FOR ONE-LANE ROUNDABOUT

LEGEND

* A TRUCK DETOUR ROUTE MAY BE NECESSARY TO DIVERT TRUCKS AWAY FROM THE ROUNDABOUT CIRCLE. ALSO NECESSARY IS A STREET NAME AND/OR ROUTE NUMBER SIGN, INFORMING MOTORISTS WHERE THEY NEED TO EXIT THE ROUNDABOUT CIRCLE TO ENTER THE DESIRED STREET AND/OR ROUTE NUMBER.

■ CHANNELIZING DEVICE: FOR TYPE OF DEVICE TO BE USED, SEE THE SCHEDULE OF CONSTRUCTION TRAFFIC CONTROL DEVICES INCLUDED IN THE PLANS. IF PROJECT IS DESIGNATED AS A "SIGNIFICANT PROJECT" (SEE GENERAL NOTE 25), CONCRETE BARRIER SHALL BE USED FOR CHANNELIZATION DEVICES (TEMP) AS DETERMINED BY THE ENGINEER.

TYPE III BARRICADE

DIRECTION OF TRAVEL

WORK AREA

ADVANCE WARNING FLASHING OR SEQUENCING ARROW PANEL.

▲ THESE DEVICES ARE OPTIONAL. THEIR NEED SHALL BE DETERMINED BY DETOUR DESIGN AND/OR SCOPE OF CONSTRUCTION ACTIVITY, AND ARE REQUIRED WHEN THEY ARE INCLUDED IN THE SCHEDULE OF CONSTRUCTION CONTROL DEVICES.

◆ THESE DEVICES ARE NOT OPTIONAL IF THE POSTED SPEED LIMIT IN THE WORK ZONE IS REDUCED.

⬟ G20-11 SIGN IS REQUIRED WHEN SECTION 626 "PUBLIC INFORMATION INFORMATION SERVICES" PROJECT SPECIAL PROVISION WORKSHEET SPECIFICATION IS REQUIRED WITH PROJECT.

FLASHING BEACON

⬢ REQUIRED WHEN WORK OCCUPIES THE LOCATION FOR MORE THAN 3 DAYS.

★ SEE FINES DOUBLE SIGNING NOTES ON SHEET 12.

TRUCK MOUNTED ATTENUATOR (TMA)

L TRANSITION TAPER LENGTH:

L = MINIMUM LENGTH OF TAPER

SPEED 45 MPH OR MORE: $L = \frac{WS^2}{60}$

SPEED 40 MPH OR LESS: L

S = NUMERICAL VALUE OF SPEED LIMIT OR 85 PERCENTILE SPEED

W = WIDTH OF OFFSET

SHOULDER TAPER = 1/3 L

BUFFER SPACE SEE GENERAL NOTE 21 ON SHEET 1.

FLAGGER

ROAD TYPE	DISTANCE BETWEEN SIGNS		
	A	B	C
URBAN (<=40 MPH)	100	100	100
URBAN (>=45 MPH)	350	350	350
RURAL	500	500	500
EXPRESSWAY/FREEWAY	1000	1500	2640

Computer File Information	
Creation Date: 07/04/12	Initials: KEN
Last Modification Date: 12/08/14	Initials: KEN
Full Path: www.coloradodot.info/library/traffic/traffic-s-standard-plans	
Drawing File Name: S-630-01_20of24.dgn	
CAD Ver.: MicroStation V8 Scale: Not to Scale Units: English	

	Sheet Revisions	
	Date:	Comments
R-7	12/08/14	NEW SHEET 20. OLD SHEET 20 NOW SHEET 24
R-X		
R-X		
R-X		

Colorado Department of Transportation
4201 East Arkansas Avenue
Denver, Colorado 80222
Phone: (303) 757-9543
Fax: (303) 757-9219
Safety & Traffic Engineering Branch KCM/KEN

TRAFFIC CONTROLS FOR HIGHWAY CONSTRUCTION

Issued By: Safety & Traffic Engineering Branch July 4, 2012

STANDARD PLAN NO.
S-630-1
Sheet No. 20 of 24

LEGEND

- VEHICLE WITH TRUCK-MOUNTED ATTENUATORS (TMA), TWO 360-DEGREE YELLOW FLASHING BEACONS, AND YELLOW FLASHING VEHICLE LIGHTS OR STROBES.
- VMS — VARIABLE MESSAGE SIGN (VMS).
- ▲ WHEN VMS IS USED, THE "SHOULDER CLOSED" SIGN BECOMES OPTIONAL.
- ■ THE "PICK-UP VEHICLES" OR "WARNING VEHICLE" MAY ENCROACH INTO THE TRAFFIC LANE WHEN THE SHOULDER IS TOO NARROW TO DRIVE ON.
- ● IF TRACKING OF THE WET PAINT IS ANTICIPATED, THE USE OF CONES OR STATIONARY "WET PAINT" SIGNS SHALL BE POSTED.
- ⬢ THE VARIABLE SEPARATION DISTANCE BETWEEN THE "CONE PLACEMENT VEHICLE" AND "CONE PICKUP VEHICLE" SHALL BE DETERMINED BY THE TRACK DRYING TIME OF THE PAVEMENT MARKING MATERIAL.
- ⬬ OPTIONAL

FOLLOWING DISTANCE CHART FOR WARNING AND MOBILE ATTENUATOR (OR CONE PICKUP) VEHICLE

POSTED WZ SPEED LIMIT (MPH)	FOLLOWING DISTANCE (FEET)
0 - 30	250 - 550
35 - 40	325 - 700
45 - 50	600 - 900
55	750 - 1200
60 - 65	1000 - 1400
70 - 75	1200 - 1600

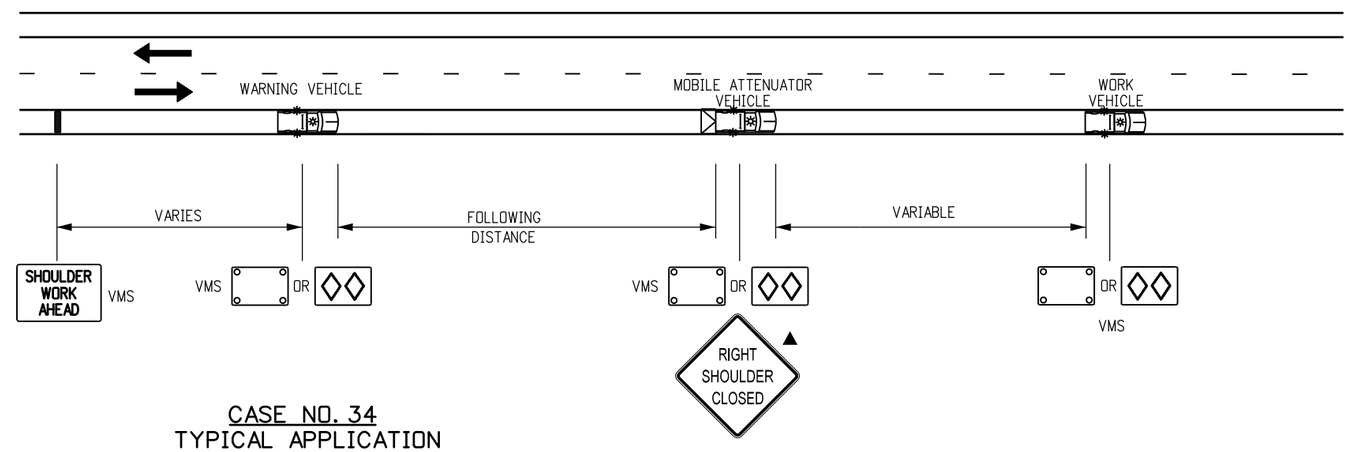

CASE NO. 34
TYPICAL APPLICATION
MOBILE WORK ZONE
MOBILE SHOULDER CLOSURE ON 2-LANE UNDIVIDED HIGHWAY

NOTE

THE VARIABLE SEPARATION DISTANCE BETWEEN THE "CONE PLACEMENT VEHICLE" AND "CONE PICKUP VEHICLE" SHALL BE DETERMINED BY THE TRACK DRYING TIME OF THE PAVEMENT MARKING MATERIAL.

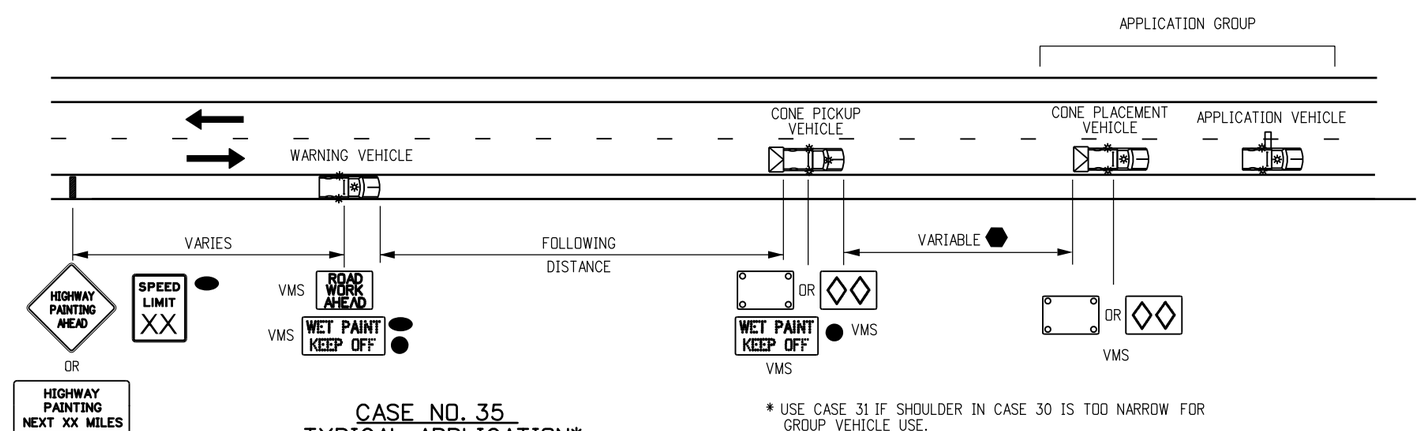

* USE CASE 31 IF SHOULDER IN CASE 30 IS TOO NARROW FOR GROUP VEHICLE USE.

CASE NO. 35
TYPICAL APPLICATION*
MOBILE PAVEMENT MARKING ZONE
CENTERLINE STRIPING ON 2-LANE UNDIVIDED HIGHWAY

Computer File Information		
Creation Date: 07/04/12	Initials: KEN	
Last Modification Date: 12/8/14	Initials: KEN	R-5
Full Path: www.coloradodot.info/library/traffic/traffic-s-standard-plans		R-7
Drawing File Name: S-630-1_21of24.dgn		R-X
CAD Ver.: MicroStation V8 Scale: Not to Scale Units: English		R-X

Sheet Revisions	
Date:	Comments
3/27/14	REDUCED NUMBER OF TMA VEHICLES, REVISE VMS AND ADD STATIONARY SIGNS
12/8/14	FORMERLY SHEET 17.

Colorado Department of Transportation
4201 East Arkansas Avenue
Denver, Colorado 80222
Phone: (303) 757-9543
Fax: (303) 757-9219
Safety & Traffic Engineering Branch KCM/KEN

TRAFFIC CONTROLS FOR HIGHWAY CONSTRUCTION

Issued By: Safety & Traffic Engineering Branch July 4, 2012

STANDARD PLAN NO.
S-630-1
Sheet No. 21 of 24

FOR CASE #32, VEHICLE/SIGN SEQUENCE IS THE SAME FOR THE LEFT SIDE OF HIGHWAY, WHILE TAPER IS MIRRORED ABOUT THE CENTER LANE, WHEN MOBILE WORK ZONE IS LOCATED ON THE LEFT SIDE OF HIGHWAY.

LEGEND

- VEHICLE WITH TRUCK-MOUNTED ATTENUATORS (TMA), TWO 360-DEGREE YELLOW FLASHING BEACONS, AND YELLOW FLASHING VEHICLE LIGHTS OR STROBES.
- ADVANCE WARNING FLASHING OR SEQUENCING ARROW PANEL.
- AHEAD / LANE CLOSED — PORTABLE VARIABLE MESSAGE SIGN (VMS).
- ▲ WHEN THE VMS IS USED, THE "SHOULDER CLOSED" (W21-5aX) OR W21-5bX), AND "RAMP CLOSED AHEAD" SIGNS BECOME OPTIONAL.
- ● IF TRACKING OF THE WET PAINT IS ANTICIPATED, THE USE OF CONES OR STATIONARY "WET PAINT" SIGNS SHALL BE POSTED.
- ⬢ THE VARIABLE SEPARATION DISTANCE BETWEEN THE "CONE PLACEMENT VEHICLE" AND "CONE PICKUP VEHICLE" SHALL BE DETERMINED BY THE TRACK DRYING TIME OF THE PAVEMENT MARKING MATERIAL.
- ⬬ OPTIONAL

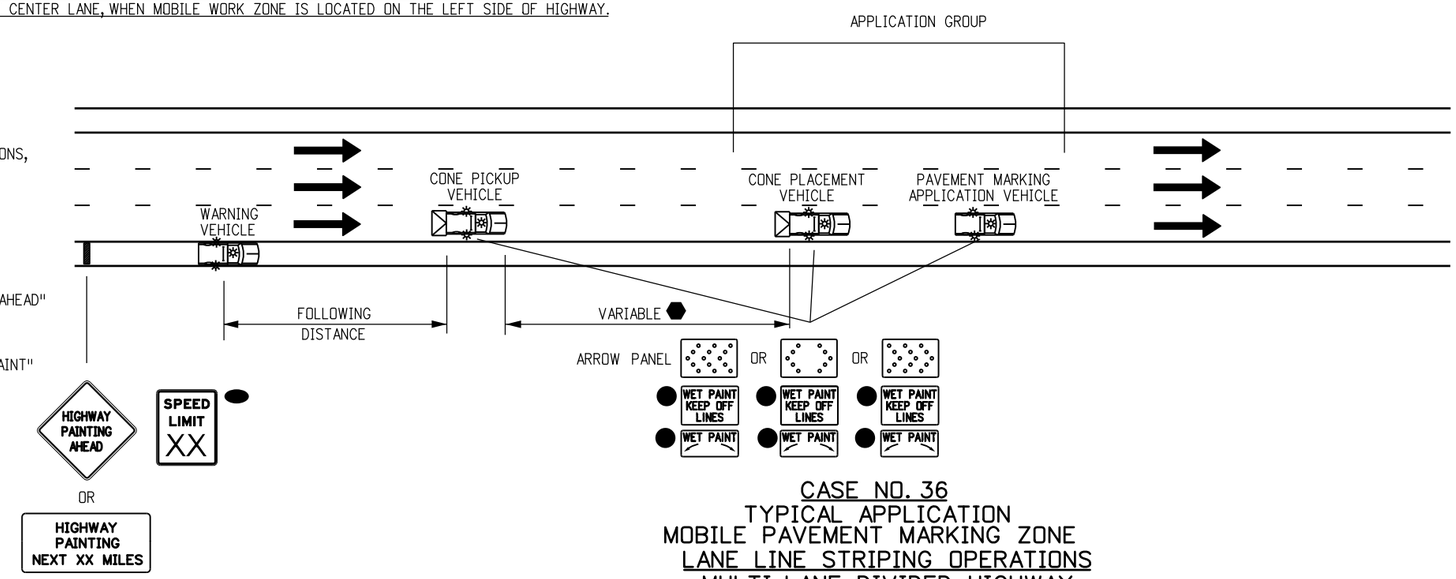

CASE NO. 36
TYPICAL APPLICATION
MOBILE PAVEMENT MARKING ZONE
LANE LINE STRIPING OPERATIONS
MULTI-LANE DIVIDED HIGHWAY

FOLLOWING DISTANCE CHART FOR WARNING VEHICLE AND CONE PICKUP VEHICLES

POSTED WZ SPEED LIMIT (MPH)	FOLLOWING DISTANCE (FEET)
0 - 30	250 - 550
35 - 40	325 - 700
45 - 50	600 - 900
55	750 - 1200
60 - 65	1000 - 1400
70 - 75	1200 - 1600

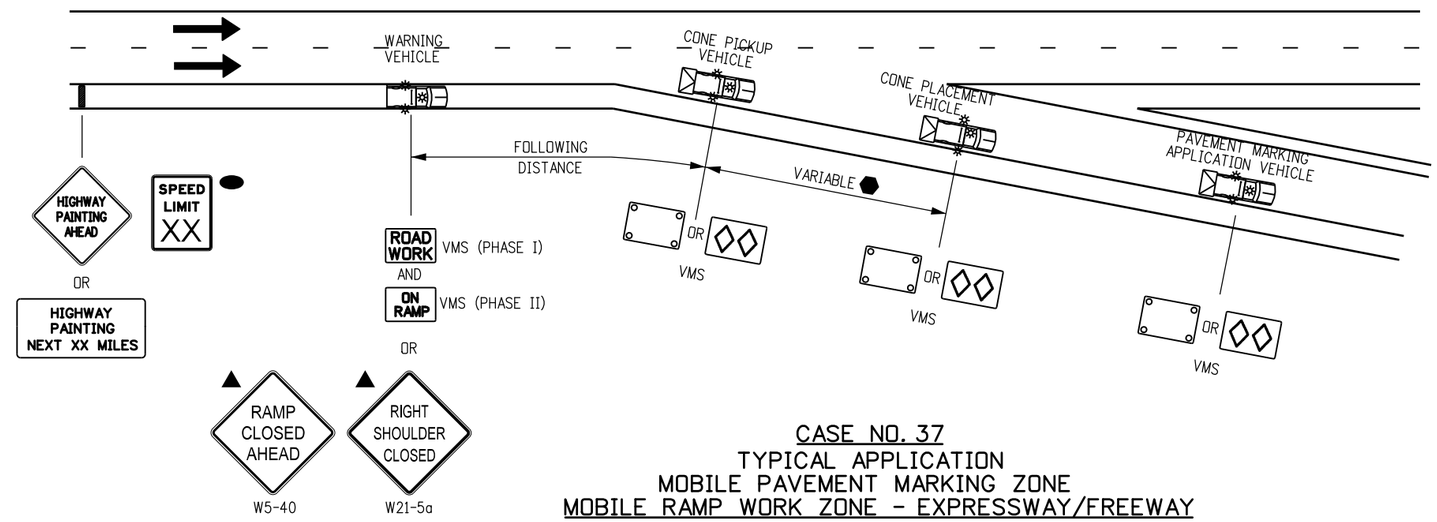

CASE NO. 37
TYPICAL APPLICATION
MOBILE PAVEMENT MARKING ZONE
MOBILE RAMP WORK ZONE - EXPRESSWAY/FREEWAY

NOTES

1. THE SIGNING VEHICLES MAY ENCROACH INTO THE TRAFFIC LANE WHEN THE SHOULDER IS TOO NARROW TO DRIVE ON.
2. IF THE RAMP CANNOT BE REOPENED WITHIN 15 MINUTES, USE CASE NO. 22 OF THE S-630-1 STANDARD PLAN.

Computer File Information		
Creation Date: 07/04/12		Initials: KEN
Last Modification Date: 12/8/14		Initials: KEN
Full Path: www.coloradodot.info/library/traffic/traffic-s-standard-plans		
Drawing File Name: S-630-1_22of24.dgn		
CAD Ver.: MicroStation V8 Scale: Not to Scale Units: English		

	Sheet Revisions	
	Date:	Comments
R-5	3/27/14	REDUCE NUMBER OF TMA VEHICLES, REVISE VMS, AND ADD STATIONARY SIGNS
R-7	12/8/14	FORMERLY SHEET 18. SIGN CODE UPDATE. W5-40 & W21-5a.
R-X		
R-X		

Colorado Department of Transportation
4201 East Arkansas Avenue
Denver, Colorado 80222
Phone: (303) 757-9543
Fax: (303) 757-9219
Safety & Traffic Engineering Branch KCM/KEN

TRAFFIC CONTROLS FOR HIGHWAY CONSTRUCTION

Issued By: Safety & Traffic Engineering Branch July 4, 2012

STANDARD PLAN NO.
S-630-1
Sheet No. 22 of 24

LEGEND

VEHICLE WITH TRUCK-MOUNTED ATTENUATORS (TMA), TWO 360-DEGREE YELLOW FLASHING BEACONS, AND YELLOW FLASHING VEHICLE LIGHTS OR STROBES.

ADVANCE WARNING FLASHING OR SEQUENCING ARROW PANEL.

LANE CLOSED — PORTABLE VARIABLE MESSAGE SIGN (VMS).

▲ WHEN THE VMS IS USED, THE "RIGHT LANE CLSED AHEAD" (W9-3X) SIGN BECOMES OPTIONAL.

■ THE "CONE PICK-UP VEHICLE" OR "WARNING VEHICLE" MAY ENCROACH INTO THE TRAFFIC LANE WHEN THE SHOULDER IS TOO NARROW TO DRIVE ON.

NOTES

1. IN ROADWAY WHERE THE AADT IS 2,000 OR LESS, A SINGLE WORK VEHICLE WITH APPROPRIATE WARNING DEVICES ON THE VEHICLE MAY BE USED.
2. RADIO COMMUNICATIONS BETWEEN THE WORKCREW AND THE MOVING BLOCKADE ARE REQUIRED TO ADJUST THE BLOCKADE TO INCREASE OR DECREASE THE CLOSURE TIME. RELEASE TRAFFIC ONLY AFTER CONFIRMATION THAT ALL WORKERS AND THEIR VEHICLES ARE CLEAR OF THE ROADWAY.
3. IF APPLICABLE, ALL RAMPS AND ACCESS BETWEEN THE MOVING BLOCKADE AND WORK OPERATION AREA SHALL BE TEMPORARILY CLOSED USING TRAFFIC CONTROL EQUIPMENT AND PERSONNEL. EACH RAMP MUST REMAIN CLOSED UNTIL THE CREW DOING THE WORK GIVES THE "ALL CLEAR" SIGNAL OR UNTIL THE FRONT OF THE MOVING BLOCKADE PASSES THE CLOSED RAMP(S).

FOLLOWING DISTANCE CHART FOR WARNING VEHICLE AND SIGNING VEHICLES

POSTED WZ SPEED LIMIT (MPH)	FOLLOWING DISTANCE (FEET)
0 - 30	250 - 550
35 - 40	325 - 700
45 - 50	600 - 900
55	750 - 1200
60 - 65	1000 - 1400
70 - 75	1200 - 1600

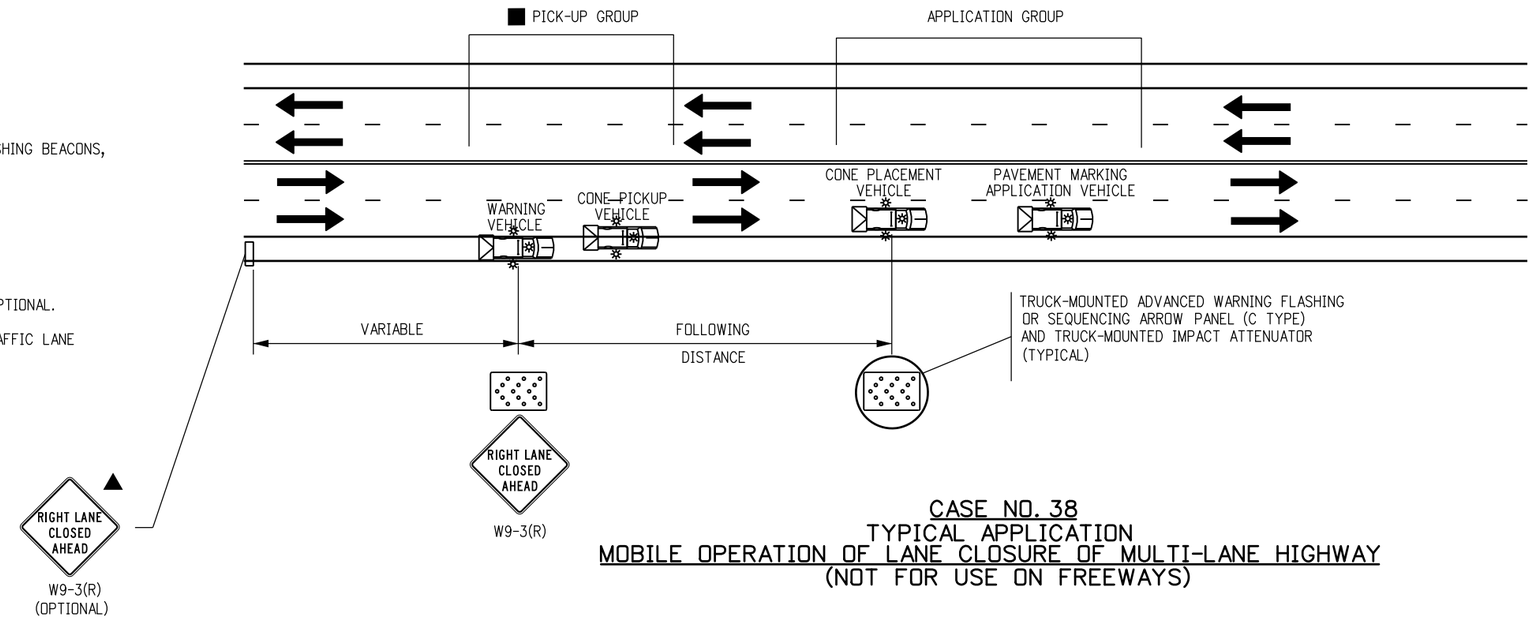

CASE NO. 38
TYPICAL APPLICATION
MOBILE OPERATION OF LANE CLOSURE OF MULTI-LANE HIGHWAY
(NOT FOR USE ON FREEWAYS)

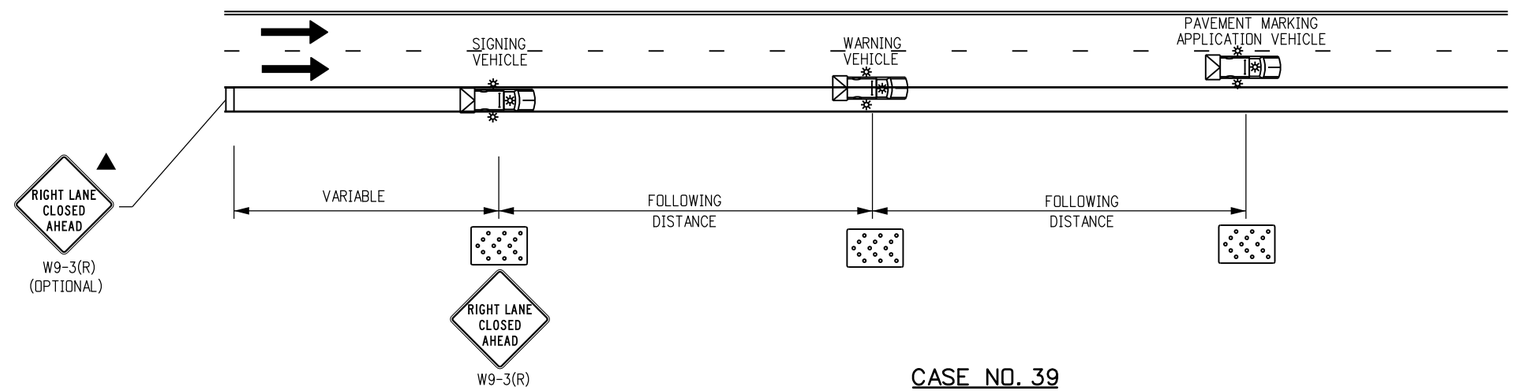

CASE NO. 39
TYPICAL APPLICATION
MOBILE OPERATION OF LANE CLOSURE OF MULTI-LANE HIGHWAY

Computer File Information		
Creation Date: 07/04/12	Initials: KEN	
Last Modification Date: 12/8/14	Initials: KEN	R-7
Full Path: www.coloradodot.info/library/traffic/traffic-s-standard-plans		R-X
Drawing File Name: S-630-1_23of24.dgn		R-X
CAD Ver.: MicroStation V8 Scale: Not to Scale Units: English		R-X

Sheet Revisions	
Date:	Comments
12/8/14	FORMERLY SHEET 19.

Colorado Department of Transportation
4201 East Arkansas Avenue
Denver, Colorado 80222
Phone: (303) 757-9543
Fax: (303) 757-9219
Safety & Traffic Engineering Branch KCM/KEN

TRAFFIC CONTROLS FOR HIGHWAY CONSTRUCTION

Issued By: Safety & Traffic Engineering Branch July 4, 2012

STANDARD PLAN NO.
S-630-1
Sheet No. 23 of 24

TYPICAL CONSTRUCTION ZONE SIGNS

THESE SIGNING NOTES ARE INTENDED AS A QUICK REFERENCE
FOR TYPICAL SIGN USE AND PLACEMENT IN CONSTRUCTION ZONES.

G20-1 "ROAD/WORK/NEXT XX MILES" - THIS SIGN SHALL BE ERECTED AT THE LIMITS OF ANY ROAD CONSTRUCTION OR MAINTENANCE PROJECT OF MORE THAN TWO (2) MILES IN LENGTH WHERE TRAFFIC IS MAINTAINED THROUGH THE PROJECT.

G20-4 "PILOT CAR/FOLLOW ME" - THIS SIGN SHALL BE MOUNTED IN A CONSPICUOUS POSITION ON THE REAR OF A VEHICLE USED FOR GUIDING ONE-WAY TRAFFIC THROUGH OR AROUND THE PROJECT.

G20-5P "WORK ZONE" - THIS PLAQUE SHALL BE MOUNTED JUST ABOVE THE WORK ZONE SPEED LIMIT SIGNS PRIOR TO THE WORK ZONE AREA.

G20-10 THANK YOU SIGN - THIS SIGN SHOULD BE ERECTED APPROXIMATELY 500 FEET BEYOND THE END OF THE PROJECT.

G20-11 CONSTRUCTION PROJECT INFORMATION SIGN - THIS SIGN SHOULD BE ERECTED AS DESCRIBED IN THE SECTION 626 STANDARD SPECIFICATION.

G20-55(X) "X MINUTE CLOSURE. EXPECT DELAYS" - THIS SIGN IS INTENDED FOR USE 500 FEET PAST THE "WORK ZONE"/SPEED LIMIT SIGN.

M4-9( ) "DETOUR/<<<<" - THIS SIGN IS USED FOR UNNUMBERED ROUTES; FOR USE IN EMERGENCY SITUATIONS; FOR PERIODS OF SHORT DURATION; OR WHERE, OVER RELATIVELY SHORT DISTANCES. IT IS NOT NECESSARY TO SHOW ROUTE MARKERS TO GUIDE TRAFFIC ALONG THE DETOUR AND BACK TO ITS AUTHORIZED ROUTE.

M4-10( ) "DETOUR ARROW" - THIS SIGN SHOULD BE MOUNTED JUST BELOW THE ROAD CLOSED SIGN AT THE POINT WHERE THE DETOUR ROADWAY OR ROUTE HAS BEEN ESTABLISHED DUE TO THE CLOSURE OF THE STREET OR HIGHWAY TO THROUGH TRAFFIC.

R2-1( ) "SPEED/LIMIT/XX" - THESE SIGNS ARE INTENDED TO REDUCE TRAFFIC SPEED IN ADVANCE OF THE DAILY WORK AREA WITHIN THE OVERALL PROJECT LIMITS.

R2-1(XX) "SPEED/LIMIT/XX" - THIS SIGN IS INTENDED FOR USE 500 FEET PAST THE "THANK YOU" SIGN TO BRING TRAFFIC BACK TO ORIGINAL POSTED SPEED.

R2-6P "FINES DOUBLE" - THIS SIGN IS INTENDED FOR USE WITHIN WORK ZONES TO PROVIDE NOTICE OF INCREASED FINES FOR TRAFFIC VIOLATIONS WITHIN WORK ZONES.

R4-1 "DO NOT PASS" - THIS SIGN SHOULD BE PLACED AT TRANSITION TAPER POINT.

R4-2 "PASS WITH CARE" - THIS SIGN SHOULD BE PLACED AT TRANSITION TAPER POINT.

R11-2 "ROAD/CLOSED" - THIS SIGN IS TO BE MOUNTED ON THE BARRICADE THAT IS PLACED BEFORE THE WORK ZONE ENTRANCE TO PROHIBIT TRAFFIC FROM ENTERING THE WORK ZONE.

R11-3 "ROAD CLOSED/X MILES AHEAD/L.T.O. - THIS SIGN SHOULD BE PLACED WHERE THROUGH TRAFFIC MUST DETOUR TO AVOID THE CLOSURE OF THE ROAD SOME DISTANCE BEYOND, BUT WHERE THE ROAD IS OPEN TO LOCAL TRAFFIC UP TO THE POINT OF CLOSURE.

R11-4 "ROAD CLOSED/TO/THRU TRAFFIC" FOR URBAN USE - THIS SIGN SHOULD BE PLACED WHERE THROUGH TRAFFIC MUST DETOUR TO AVOID THE CLOSURE OF THE ROAD SOME DISTANCE BEYOND, BUT WHERE THE ROAD IS OPEN TO LOCAL TRAFFIC UP TO THE POINT OF CLOSURE.

R52-6a "BEGIN FINES DOUBLE IN WORK ZONE" SIGN IS PLACED AT THE BEGINNING OF THE ADVANCED WARNING AREA OF THE TRAFFIC CONTROL ZONE.

R52-6b "END FINES DOUBLE IN WORK ZONE" SIGN IS PLACED AFTER WORK ZONE AREA, PAST DOWNSTREAM TAPER SECTION.

W1-1( ) "TURN ARROW" - THIS SIGN IS INTENDED FOR USE WHERE ENGINEERING INVESTIGATIONS OF ROADWAY CONDITIONS SHOW THE RECOMMENDED SPEED ON THE TURN TO BE 30 MPH OR LESS.✱

W1-2( ) "CURVE ARROW" - THIS SIGN IS INTENDED FOR USE WHERE ENGINEERING INVESTIGATIONS OF ROADWAY CONDITIONS SHOW THE RECOMMENDED SPEED ON THE CURVE TO BE IN THE RANGE BETWEEN 30 AND 60 MILES PER HOUR.✱

W1-3( ) "REVERSE TURN ARROW" - THIS SIGN IS INTENDED FOR USE WHERE TWO TURNS OR THE CURVE AND A TURN IN OPPOSITE DIRECTIONS ARE SEPARATED BY A TANGENT OF LESS THAN 600 FEET.✱

W1-4( ) "REVERSE CURVE ARROW" - THIS SIGN IS INTENDED FOR USE WHERE TWO CURVES IN OPPOSITE DIRECTIONS ARE SEPARATED BY A TANGENT OF LESS THAN 600 FEET.✱

W1-6( ) "ARROW" - THIS SIGN SHOULD BE MOUNTED JUST BELOW THE ROAD CLOSED SIGN AT THE POINT WHERE THE DIVERSION HAS BEEN ESTABLISHED DUE TO THE LANE CLOSURE.

W3-2 "YIELD AHEAD" - THIS SIGN IS INTENDED FOR USE AT THE APPROACH TO THE YIELD SIGN THAT IS NOT VISIBLE FOR A SUFFICIENT DISTANCE TO PERMIT THE DRIVER TO BRING HIS VEHICLE TO A STOP AT THE YIELD SIGN.✱

W3-4 "BE PREPARED TO STOP" - THIS SIGN TO BE PLACED 1.5 MILES IN ADVANCED OF A FLAGGER.

W4-2(X) "LEFT (RIGHT) LANE TRANSITION SYMBOL" - THIS SIGN IS INTENDED FOR USE IN ADVANCE OF THE REDUCTION IN THE NUMBER OF TRAFFIC LANES IN THE DIRECTION OF TRAVEL ON THE MULTILANE HIGHWAY.✱

W4-50 "USE BOTH LANES DURING CONGESTION" - THIS SIGN IS INTENDED FOR USE IN ADVANCE OF THE "ROAD WORK X MILE" ADVANCED WARNING SIGN.

W4-51 "USE BOTH LANES TO MERGE POINT" - THIS SIGN IS INTENDED TO DIRECT MOTORISTS TO USE BOTH TRAVEL LANES UNTIL THE LANES ARE REDUCED TO ONE LANE.

W4-52 "TAKE TURNS MERGE HERE" - THIS SIGN IS INTENDED TO WARN MOTORISTS IN ADVANCED TO MOVE FROM THE CLOSED TRAVEL LANE TO THE OPEN TRAVEL LANE, USUALLY 500 FEET IN ADVANCED OF THE START OF THE TRANSITION TAPER .

W5-1 "ROAD NARROWS" - THIS SIGN IS INTENDED FOR USE IN ADVANCE OF THE TRANSITION ON THE ROAD WHERE THE PAVEMENT WIDTH IS REDUCED ABRUPTLY TO A WIDTH SUCH THAT TWO CARS CANNOT PASS WITHOUT REDUCING SPEED.✱

W5-2a "NARROW BRIDGE SYMBOL" - THIS SIGN IS INTENDED FOR USE IN ADVANCE OF A BRIDGE OR CULVERT HAVING A CLEAR TWO-WAY ROADWAY WIDTH OF 16 TO 18 FEET OR ANY BRIDGE OR CULVERT HAVING A ROADWAY CLEARANCE LESS THAN THE WIDTH OF THE APPROACH PAVEMENT.✱

W5-3 "ONE LANE/BRIDGE" - THIS SIGN SHOULD BE PLACED ON TWO-WAY ROADWAYS IN ADVANCE OF THE BRIDGES OR CULVERTS WHERE THE ROADWAY WIDTH IS LESS THAN 16 FEET (18 FEET FOR COMMERCIAL VEHICLES) OR WHEN THE ALIGNMENT IS POOR ON THE APPROACH TO THE STRUCTURE HAVING A CLEAR ROADWAY WIDTH OF 18 FEET OR LESS✱

W6-1 "DIVIDED HIGHWAY SYMBOL" - THIS SIGN SHOULD BE PLACED ON THE APPROACHES TO THE SECTION OF HIGHWAY WHERE OPPOSING FLOWS OF TRAFFIC ARE SEPARATED BY A PHYSICAL MEDIAN.

W6-2 "DIVIDED HIGHWAY ENDS SYMBOL" - THIS SIGN SHOULD BE PLACED AT THE END OF THE SECTION OF PHYSICALLY DIVIDED HIGHWAY AS A WARNING OF TWO-WAY TRAFFIC AHEAD.

W6-3 "TWO-WAY TRAFFIC SYMBOL" - THIS SIGN IS INTENDED FOR USE TO GIVE WARNING OF TRANSITION FROM A SEPARATED ONE-WAY ROADWAY TO A TWO-WAY ROADWAY.✱

W7-1 "HILL SYMBOL" - THIS SIGN SHOULD BE PLACED AT A POINT IN ADVANCE OF THE DOWNGRADE WHERE THE LENGTH, PERCENT OF GRADE, HORIZONTAL CURVATURE, OR OTHER PHYSICAL FEATURES REQUIRE SPECIAL CONSIDERATION ON THE PART OF DRIVERS.✱

W8-1,W8-2 "BUMP"/"DIP" - THESE SIGNS ARE INTENDED FOR USE TO GIVE WARNING OF A SHARP RISE OR DEPRESSION IN THE PROFILE OF THE ROAD THAT IS SUFFICIENTLY ABRUPT TO AFFECT VEHICLE OPERATION OR CAUSE CONSIDERABLE DISCOMFORT TO PASSENGERS.✱

W8-3a "PAVEMENT ENDS SYMBOL" - THIS SIGN IS INTENDED FOR USE IN ADVANCE OF A POINT WHERE THE PAVEMENT SURFACE CHANGES FROM A HARD-SURFACED PAVEMENT TO THE LOW-TYPE SURFACE OR EARTH ROAD.✱

W8-4 "SOFT SHOULDER" - THIS SIGN IS INTENDED FOR USE TO WARN OF A SOFT SHOULDER CONDITION THAT COULD PRESENT A PROBLEM TO VEHICLES THAT MAY GET OFF THE PAVEMENT.✱

W8-5 "SLIPPERY WHEN WET SYMBOL" - THIS SIGN SHOULD BE PLACED IN ADVANCE OF THE CONDITION WHERE THE HIGHWAY SURFACE IS SLIPPERY BEYOND WHAT IS ORDINARY WHEN WET.✱

W8-9a "SHOULDER DROP-OFF" - THIS SIGN IS INTENDED FOR USE IN ADVANCE OF A SHOULDER DROP-OFF THAT EXCEEDS THREE INCHES IN HEIGHT.✱

W8-11 "UNEVEN LANES" - THIS SIGN IS INTENDED FOR USE IN ADVANCE OF AN UNEVEN ADJACENT LANE SITUATION THAT EXCEEDS ONE INCH IN HEIGHT.✱

W9-1( ) "LEFT (RIGHT) LANE ENDS" - THIS SIGN IS INTENDED FOR USE IN ADVANCE OF THE PAVEMENT WIDTH TRANSITION SIGN (W4-2).

W9-2( ) "LANE ENDS/MERGE LEFT (RIGHT)" - THIS SIGN IS INTENDED FOR USE AS A SUPPLEMENT TO THE PAVEMENT WIDTH TRANSITION SIGN (W4-2).

W9-3 OR W9-3a( ) "CENTER LANE CLOSED AHEAD" - THIS SIGN SHOULD BE USED IN ADVANCE OF THE POINT WHERE WORK OCCUPIES THE CENTER LANE AND TRAFFIC IS DIRECTED TO THE RIGHT OR LEFT OF THE WORK ZONE.✱

W12-1 "DOUBLE ARROW SYMBOL" - THIS SIGN SHOULD BE PLACED AT THE POINT OF THE OBSTRUCTION IN THE ROADWAY, WHERE TRAFFIC IS PERMITTED TO PASS ON EITHER SIDE OF THE OBSTRUCTION.

W12-2 "LOW CLEARANCE SYMBOL" - THIS SIGN IS INTENDED FOR USE IN ADVANCE OF AN OBSTRUCTION TO WARN VEHICLE OPERATORS OF CLEARANCES LESS THAN THE MAXIMUM VEHICLE HEIGHT PERMITTED PLUS 12 INCHES.✱

W13-1P( ) "ADVISORY SPEED PLAQUE" - THIS PLAQUE IS INTENDED TO SUPPLEMENT WARNING SIGNS ONLY AND SHALL NOT BE MOUNTED ALONE. IT IS USED TO INDICATE THE MAXIMUM RECOMMENDED SPEED FOR THE INDICATED CONDITION.

W13-3 "ADVISORY RAMP SPEED" - THIS SIGN IS TO BE POSTED TO INFORM MOTORISTS WHAT THE SUGGESTED SPEED LIMIT IS ON A RAMP.

W20-1 "ROAD/WORK/AHEAD" - THIS SIGN IS TO BE LOCATED IN ADVANCE OF THE INITIAL ACTIVITY OR DETOUR A DRIVER MAY ENCOUNTER, AND IS INTENDED TO BE USED AS A WARNING OF OBSTRUCTIONS OR RESTRICTIONS.

W20-2 "DETOUR/(DIST.)" - THIS SIGN IS INTENDED FOR USE IN ADVANCE OF THE POINT AT WHICH TRAFFIC IS DIVERTED OVER A TEMPORARY ROADWAY OR ROUTE.

W20-3 "ROAD/CLOSED/(DIST.)" - THIS SIGN IS INTENDED FOR USE IN ADVANCE OF A POINT AT WHICH A ROADWAY IS CLOSED TO ALL TRAFFIC OR TO ALL BUT LOCAL TRAFFIC.

W20-4 "ONE LANE/ROAD/(DIST.)" - THIS SIGN IS INTENDED FOR USE IN ADVANCE OF A POINT WHERE TRAFFIC IN BOTH DIRECTIONS MUST USE A SINGLE LANE.

W20-5( ) "XXX LANE/CLOSED/(DIST.)" - THIS SIGN IS INTENDED FOR USE IN ADVANCE OF A POINT WHERE ONE LANE OF A MULTIPLE-LANE ROADWAY IS CLOSED. IT SHOULD BE PROVIDED WITH INTERCHANGEABLE PLAQUES READING "RIGHT", "LEFT", AND "CENTER" AT NO ADDITIONAL COST TO THE PROJECT.

W20-7 "FLAGGER SYMBOL" - THIS SIGN IS INTENDED FOR USE IN ADVANCE OF ANY POINT AT WHICH A FLAGGER HAS BEEN STATIONED TO CONTROL TRAFFIC THROUGH OR AROUND THE PROJECT.✱

W20-52 "GROOVED/PAVEMENT/AHEAD" - THIS SIGN IS INTENDED TO BE USED IN ADVANCE OF A ROADWAY THAT HAS BEEN GROOVED AND/OR ROTO MILLED.

W21-1a "WORKER SYMBOL" - THIS SIGN IS INTENDED FOR USE IN CONJUNCTION WITH MINOR MAINTENANCE AND PUBLIC UTILITY OPERATIONS FOR THE PROTECTION OF MEN WORKING IN OR NEAR THE ROADWAY.

W21-2 "FRESH/OIL" - THIS SIGN IS INTENDED FOR USE WHERE RE-SURFACING OPERATIONS HAVE RENDERED THE SURFACE OF THE PAVEMENT TEMPORARILY WET, AND OBJECTIONABLE SPLASHING ON VEHICLES MAY OCCUR.✱

W21-3 "ROAD/MACHINERY/AHEAD" - THIS SIGN IS INTENDED FOR USE IN ADVANCE OF THE AREAS WHERE HEAVY EQUIPMENT IS OPERATING IN OR ADJACENT TO THE ROADWAY.✱

W21-4 "ROAD/WORK/(DIST.)" - THIS SIGN IS INTENDED FOR USE IN ADVANCE OF MAINTENANCE FOR MINOR RECONSTRUCTION OPERATIONS IN THE ROADWAY.

W21-5 "SHOULDER/WORK" - THIS SIGN IS INTENDED FOR USE IN ADVANCE OF THE PROJECT INVOLVING THE SHOULDER, WHERE THE TRAVELED WAY REMAINS UNOBSTRUCTED.

W21-6 "SURVEY/CREW" - THIS SIGN IS INTENDED FOR USE IN ADVANCE OF A POINT WHERE A SURVEYING CREW IS WORKING IN OR ADJACENT TO THE ROADWAY.✱

W22-1 "BLASTING/ZONE/(DIST.)" - THIS SIGN IS INTENDED FOR USE IN ADVANCE OF ANY POINT OR WORK SITE WHERE THERE ARE EXPLOSIVES BEING USED. THE W22-2 AND W22-3 SIGNS MUST BE USED IN SEQUENCE WITH THIS SIGN.

W22-2 "TURN OFF/2-WAY RADIOS/AND/CELLULAR/PHONES" - THIS SIGN IS TO BE USED IN SEQUENCE WITH THE W22-1 AND W22-3 SIGNS AND PLACED AT LEAST 1000 FEET FROM THE BEGINNING OF THE BLASTING ZONE.

W22-3 "END/BLASTING/ZONE" - THIS SIGN IS TO BE USED TO DENOTE THE END OF THE RADIO INFLUENCE AREA AND SHALL BE PLACED A MINIMUM OF 1000 FEET FROM THE BLASTING ZONE, EITHER WITH OR PRECEDING THE END CONSTRUCTION SIGN.

W22-50(X) "ROCK SCALING X MILE(S)" - THIS SIGN IS INTENDED TO BE USED IN ADVANCE OF A FLAGGER IN ADVANCED OF THE WORK ZONE AREA.

ADVANCE PLACEMENT OF WARNING SIGNS

POSTED OR 85TH PERCENTILE SPEED	ADVANCE PLACEMENT DISTANCE (FEET)								
	+ CONDITION A	++ CONDITION B: DECLARATION TO THE LISTED ADVISORY SPEED (MPH) FOR THE CONDITION							
		MPH							
		0	10	20	30	40	50	60	70
20	225	●	●	--	--	--	--	--	--
25	325	●	●	●	--	--	--	--	--
30	450	●	●	●	--	--	--	--	--
35	550	●	●	●	●	--	--	--	--
40	650	125	●	●	●	--	--	--	--
45	750	175	125	●	●	●	--	--	--
50	850	250	200	150	100	●	--	--	--
55	950	325	275	225	175	100	●	--	--
60	1100	400	350	300	250	175	●	--	--
65	1200	475	425	400	350	275	175	●	--
70	1250	550	525	500	425	350	250	150	--
75	1350	650	625	600	525	450	350	250	100

+ CONDITION A: SPEED REDUCTION AND LANE CHANGING IN HEAVY TRAFFIC. TYPICAL SIGNS ARE "MERGE" AND "RIGHT LANE ENDS".

++ CONDITION B: TYPICAL CONDITIONS ARE THE WARNING OF A POTENTIAL STOP SITUATION AND LOCATIONS WHERE THE ROAD USER MUST DECREASE SPEED TO MANEUVER THROUGH THE WARNED CONDITION. TYPICAL SIGNS ARE "STOP AHEAD", "SIGNAL AHEAD", "YIELD AHEAD", "CURVE", "REVERSE CURVE", "TURN".

● NO SUGGESTED DISTANCES ARE PROVIDED AT THESE SPEEDS, AS THE PLACEMENT IS DEPENDENT ON SITE CONDITIONS AND OTHER SIGNING.

A SUPPLEMENTAL PLAQUE MAY BE USED WITH WARNING SIGNS SPECIFYING THE DISTANCE TO THE CONDITION IF THERE IS AN IN-BETWEEN INTERSECTION THAT MIGHT CONFUSE THE MOTORIST.

✱ PLACEMENT SHOULD BE IN ACCORDANCE WITH WARNING SIGN PLACEMENT TABLE.

Computer File Information	
Creation Date: 07/04/12	Initials: KEN
Last Modification Date: 12/8/14	Initials: KEN
Full Path: www.coloradodot.info/library/traffic/traffic-s-standard-plans	
Drawing File Name: S-630-01_24of24.dgn	
CAD Ver.: MicroStation V8 Scale: Not to Scale	Units: English

	Sheet Revisions	
	Date:	Comments
R-4	07/26/13	CHANGE W20-7a SIGN CODE TO W20-7
R-7	12/8/14	FORMERLY SHEET 20.
R-X		
R-X		

Colorado Department of Transportation
4201 East Arkansas Avenue
Denver, Colorado 80222
Phone: (303) 757-9543
Fax: (303) 757-9219
Safety & Traffic Engineering Branch KCM/KEN

TRAFFIC CONTROLS FOR HIGHWAY CONSTRUCTION

Issued By: Safety & Traffic Engineering Branch July 4, 2012

STANDARD PLAN NO.
S-630-1
Sheet No. 24 of 24

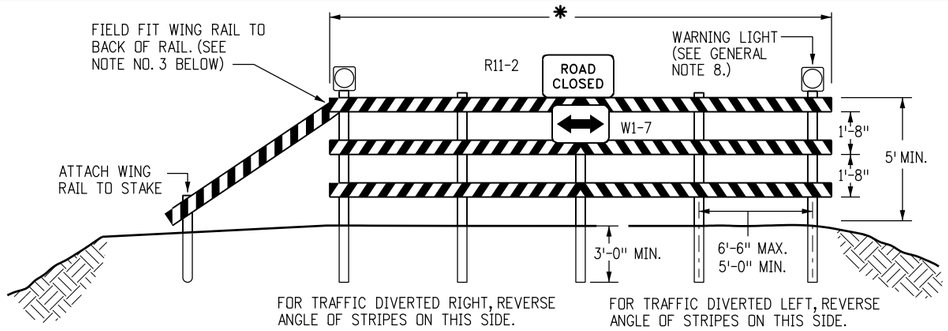

FIXED

* RAIL LENGTH TABLE

TYPE 3 BARRICADE		LENGTH
FIXED	MOVABLE	
F - A	M - A	8'- 14'
F - B	M - B	15'- 24'
F - C	M - C	25'- 35'
F - D	M - D	> 35'

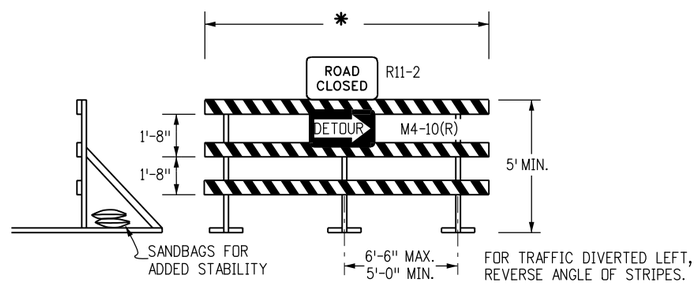

MOVABLE-SKIDS

NOTES

1. TYPE 3 BARRICADES HAVE 3 REFLECTORIZED RAIL FACES IF FACING TRAFFIC IN ONE DIRECTION AND 6 IF FACING TRAFFIC IN TWO DIRECTIONS.
2. THE PORTION OF THE POST ABOVE THE GROUND LINE SHALL BE PAINTED IN ACCORDANCE WITH THE APPROPRIATE GENERAL NOTE.
3. DETACHABLE EXTENSION WING RAILS FOR BYPASSING OF CONSTRUCTION EQUIPMENT ARE PERMITTED, WHEN NECESSARY, ON FIXED OR MOVABLE TYPE 3 BARRICADES. THE LENGTH SHALL BE ADEQUATE TO CLOSE THE BORROW PIT AND/OR SHOULDER AS REQUIRED.

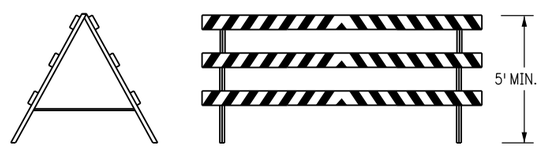

MOVABLE-HINGED

TYPICAL TYPE 3 BARRICADES

GENERAL NOTES

1. THE VARIOUS TYPES, COMBINATIONS AND APPLICATIONS OF SIGNS AND WARNING LIGHTS FOR BARRICADES REQUIRED FOR EACH PROJECT SHALL BE:
   A. AS SPECIFIED OR DETAILED IN THE PLANS.
   B. AS SHOWN IN APPLICABLE TYPICAL ILLUSTRATIONS.
   C. AS CALLED FOR AND SUBJECT TO APPROVAL BY THE ENGINEER.
2. TEMPORARY AND PERMANENT BARRICADES TYPE 3 SHALL BE FABRICATED FROM APPROVED CRASH TESTED MATERIALS. SEE SECTION 614 AND 630 OF THE STANDARD SPECIFICATIONS FOR ROAD AND BRIDGE CONSTRUCTION FOR ADDITIONAL REQUIREMENTS.
3. ALL PAINTING SHALL CONFORM WITH THE FOLLOWING:
   A. THE APPLICABLE SECTION OF 508 OF THE STANDARD SPECIFICATIONS.
   B. ALL SKIDS, BRACES AND POSTS SHALL BE PAINTED WITH 2 COATS OF EXTERIOR WHITE PAINT
   C. THE BACKSIDES OF RAILS AND VERTICAL PANEL CHANNELIZING DEVICES FACING ONE DIRECTION OF TRAFFIC ONLY SHALL BE PAINTED WITH "EXTERIOR WHITE PAINT.
   D. ALUMINUM OR GALVANIZED STEEL SKIDS, BRACES AND POSTS SHALL NOT BE PAINTED.
4. ALL STRIPED SURFACES SHALL CONFORM WITH THE FOLLOWING:
   A. THE ENTIRE AREA OF ORANGE AND WHITE STRIPES SHALL BE FABRICATED AS ONE PIECE.
   B. HORIZONTAL RAILS, WING RAILS AND VERTICAL PANEL CHANNELIZING DEVICES SHALL HAVE ORANGE AND WHITE STRIPES ON THE FACE SIDE(S) SLANTING DOWNWARD AT A 45° ANGLE TOWARD THE SIDE(S) TO WHICH TRAFFIC IS TO PASS OR TURN.
   C. PERMANENT BARRICADES SHALL HAVE RETROREFLECTIVE RED AND WHITE STRIPES. THEY MAY BE USED AT LOCATIONS TO MARK THE END OF A ROAD, STREET OR HIGHWAY WHERE THERE IS NO CROSSROAD OR OUTLET. THEY SHALL NOT BE USED AT A "T" INTERSECTION.
   D. ALL RETROREFLECTIVE SHEETING SHALL CONFORM TO ASTM D4956:
      1. ORANGE AND WHITE SHALL BE TYPE II, III OR IV.
      2. RED AND WHITE SHALL BE TYPE II, III OR IV.
5. FOR ALL WOODEN BARRICADE COMPONENTS NOMINAL LUMBER DIMENSIONS ARE SATISFACTORY.
6. ALL SCREWS, BOLTS, NUTS AND WASHERS SHALL BE GALVANIZED OR CADMIUM PLATED.
7. STABILITY OF BARRICADES AND CHANNELIZING DEVICES SHALL CONFORM WITH THE FOLLOWING:
   A. SKIDS (BASES) OF MOVABLE BARRICADES SHALL BE WEIGHTED WITH SANDBAGS ONLY WHERE NECESSARY TO PROVIDE STABILITY
   B. NO MOVABLE OR PORTABLE DEVICE SHALL BE WEIGHTED BY ANY METHOD OR WITH ANY MATERIAL THAT WOULD MAKE THEM HAZARDOUS TO MOTORISTS.
8. WARNING LIGHTS USED WITH BARRICADES, DRUMS AND VERTICAL PANELS SHALL CONFORM WITH THE FOLLOWING:
   A. USE FLASHING WARNING LIGHTS WHEN DEVICES ARE USED SINGLY, AND STEADY BURN LIGHTS WHEN THEY ARE USED IN A SERIES FOR CHANNELIZATION.
   B. THEY SHALL BE POSITIONED ABOVE THE TOP RAIL OF BARRICADES OR ON TOP OF DRUMS AND VERTICAL PANELS.
9. CONCRETE BARRIER (TEMPORARY) SHALL CONFORM WITH:
   A. PRECAST CONCRETE BARRIER AS SHOWN ON COLORADO STANDARD PLAN M-606-14.
   B. BARRIER REFLECTORS SHALL BE INSTALLED THAT MEET THE REQUIREMENTS OF STANDARD TYPICAL DELINEATOR INSTALLATIONS, EXCEPT THE MAXIMUM SPACING SHALL BE 50', AND THEY WILL NOT BE PAID FOR BUT ARE INCLUDED IN THE COST OF THE BARRIER.
   C. CONCRETE BARRIER END TREATMENT SHALL BE IN ACCORDANCE WITH CLEAR ZONE CRITERIA, AND PLACED AS SHOWN ON THE PLANS.
10. SIGN PANELS MOUNTED ON BARRICADES WILL BE PAID FOR SEPARATELY.

TYPICAL BARRICADE CHARACTERISTICS

	BARRICADE DESIGNATIONS
	TYPE 3
RAIL WIDTH	8" MIN.-12" MAX.
RAIL LENGTH	AS REQUIRED, SEE RAIL LENGTH TABLE
HEIGHT	5' MIN.
USE	TEMPORARY OR PERMANENT
STRIPES	SEE DETAIL OF BARRICADE STRIPING AND APPROPRIATE GENERAL NOTES.

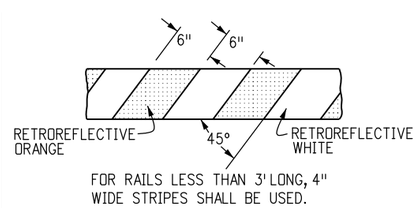

RAIL STRIPING DETAIL

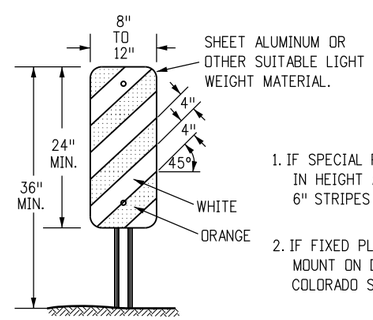

1. IF SPECIAL PANELS 3' OR GREATER IN HEIGHT ARE REQUIRED, THEN 6" STRIPES SHALL BE USED.
2. IF FIXED PLACEMENT IS REQUIRED, MOUNT ON DELINEATOR POST. SEE COLORADO STANDARD PLAN S-612-1.

TYPICAL VERTICAL PANEL

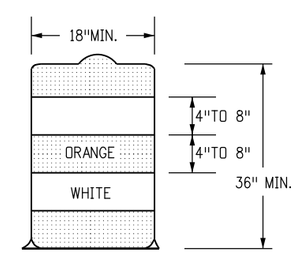

1. THE 18" MINIMUM DIMENSION SHALL APPLY TO THE SMALLEST MEASUREMENT OF OBLONG, RECTANGULAR, OR FLATTENED SIDE DRUMS.
2. THERE SHALL BE AT LEAST TWO ORANGE AND TWO WHITE HORIZONTAL, CIRCUMFERENTIAL, RETROREFLECTIVE STRIPES ON EACH DRUM.

TYPICAL DRUM

Computer File Information	
Creation Date: 07/04/12	Initials: JSW
Last Modification Date:	Initials:
Full Path: www.coloradodot.info/library/traffic/traffic-s-standard-plans	
Drawing File Name: S-630-02_1of1.dgn	
CAD Ver.: MicroStation V8 Scale: Not to Scale	Units: English

Sheet Revisions	
Date:	Comments
R-X	
R-X	
R-X	
R-X	

Colorado Department of Transportation
4201 East Arkansas Avenue
Denver, Colorado 80222
Phone: (303) 757-9543
Fax: (303) 757-9219
Safety & Traffic Engineering Branch KCM/JSW

BARRICADES, DRUMS, CONCRETE BARRIERS (TEMP) & VERTICAL PANELS

Issued By: Safety & Traffic Engineering Branch July 4, 2012

STANDARD PLAN NO.
S-630-2
Sheet No. 1 of 1

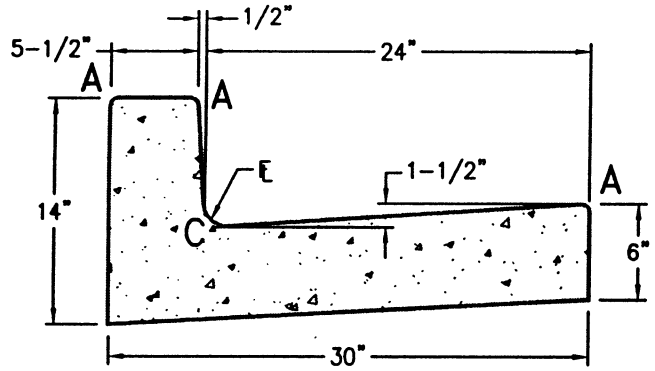

TYPE 1

VERTICAL
CURB AND GUTTER
SCALE: 1" = 1'-0"

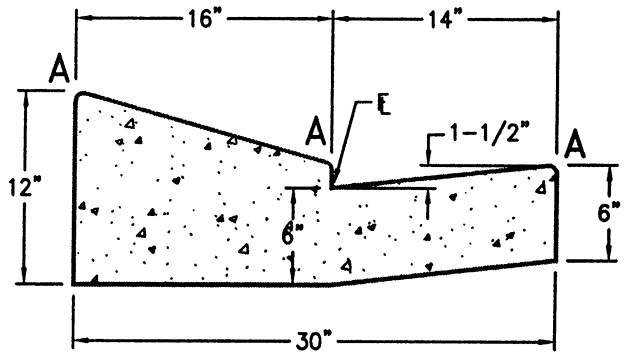

TYPE 2

RAMP
CURB AND GUTTER
SCALE: 1" = 1'-0"

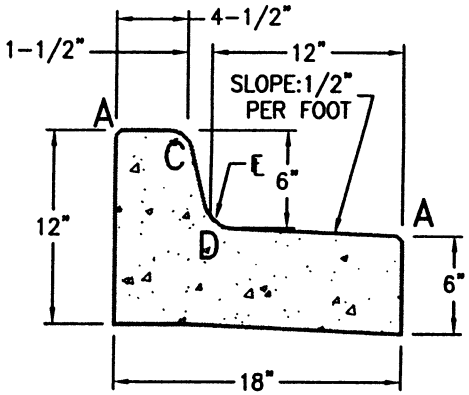

TYPE 3

STANDARD MEDIAN
CURB AND GUTTER
SCALE: 1" = 1'-0"

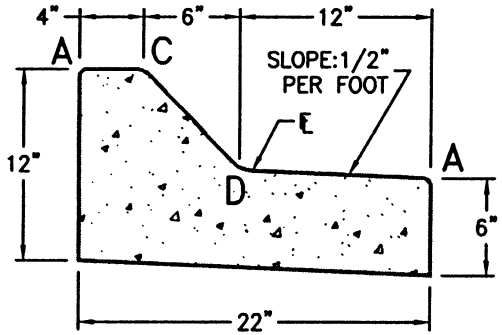

TYPE 4

MOUNTABLE MEDIAN
CURB AND GUTTER
SCALE: 1" = 1'-0"

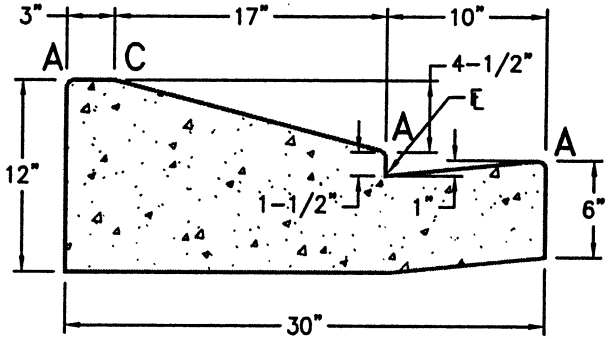

TYPE 5

MODIFIED TYPE 2
CURB AND GUTTER
SCALE: 1" = 1'-0"

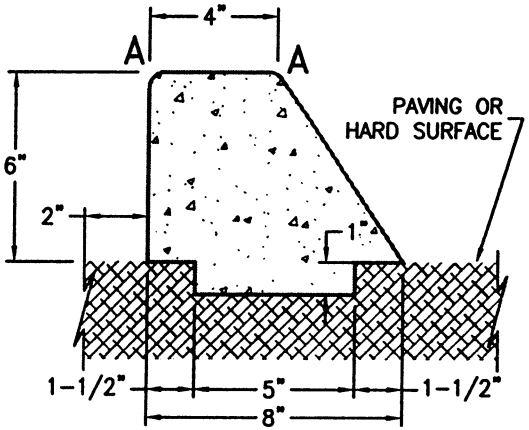

TYPE 6

ALTERNATE MOUNTABLE MEDIAN
CURB AND GUTTER
SCALE: 1" = 0'-6"

LENGTH FOR RADII
A = 1/2"
C = 1-1/2"
D = 1-1/2" TO 2"

NOTES FOR TYPE 6 CURB:

1. 4000 P.S.I. concrete mix design shall be modified to include 0.5 bags of fiber mesh per cubic foot.
2. 1" deep tool joints shall be installed at 6' (six foot) spacing.
3. Type 6 median curb will only be allowed where street section falls away from curb, "spill" condition.

CITY OF ALAMEDA, CALIFORNIA

Standard Curb & Gutter
Type 1, 2, 3, 4, 5 & 6

Approved By: Gary K. Hayes City Engineer

Drawn By: J. Niño Date: Aug.,00 STD. D-6

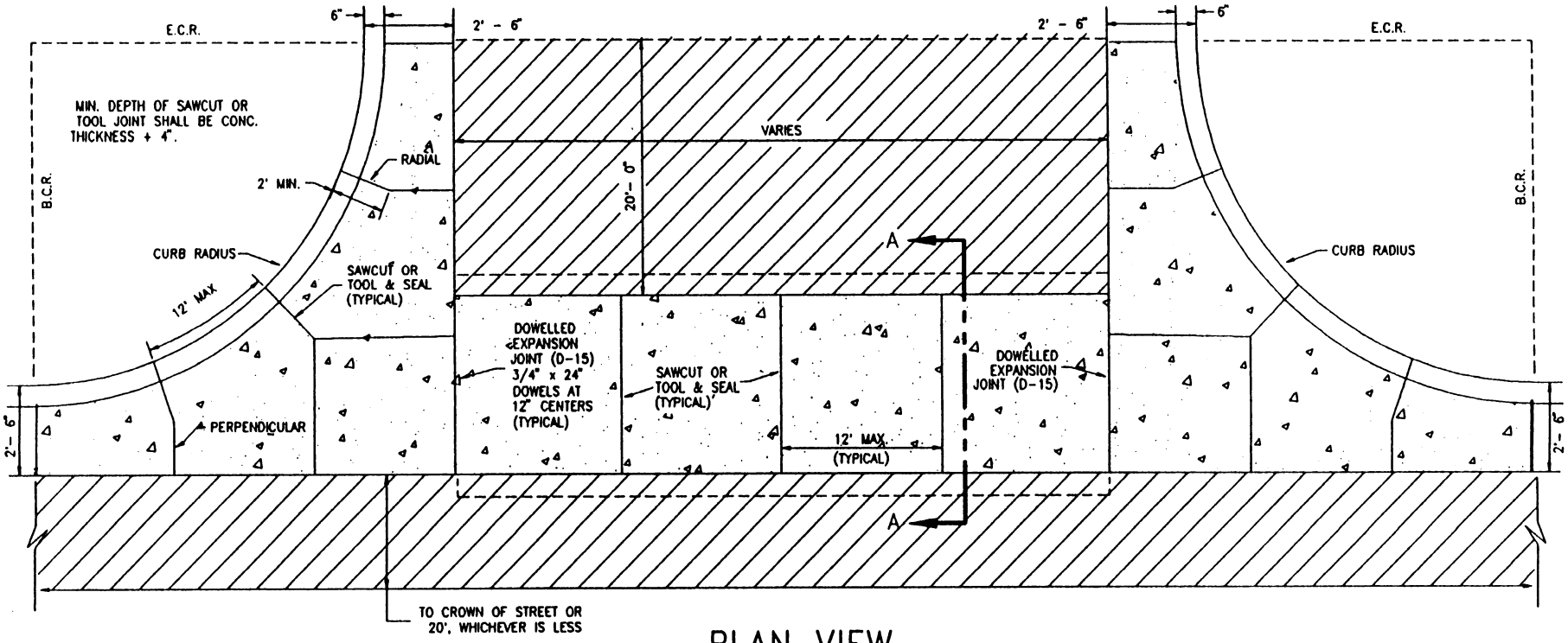

PLAN VIEW

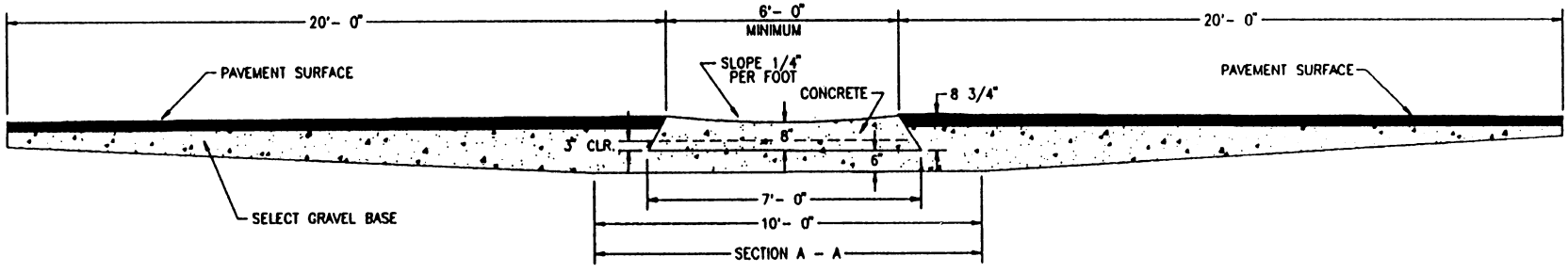

SECTION A-A

NO SCALE

NOTES

1. SQUARED-OFF RETURN TO BE POURED MONOLITHIC 8" P.C.C. MINIMUM WITH 6x6 - 4,4 W.W.F. OR #4 @ 18" E.W.
2. = 3" MINIMUM ASPHALT DEPTH (2 LIFTS).

CITY OF COLORADO SPRINGS	
Cross Pan	
approved by: Gary R. Haynes	City Engineer
Drawn BY: JZ	DATE: 03/93 STD. D-7

STANDARD PEDESTRIAN RAMP

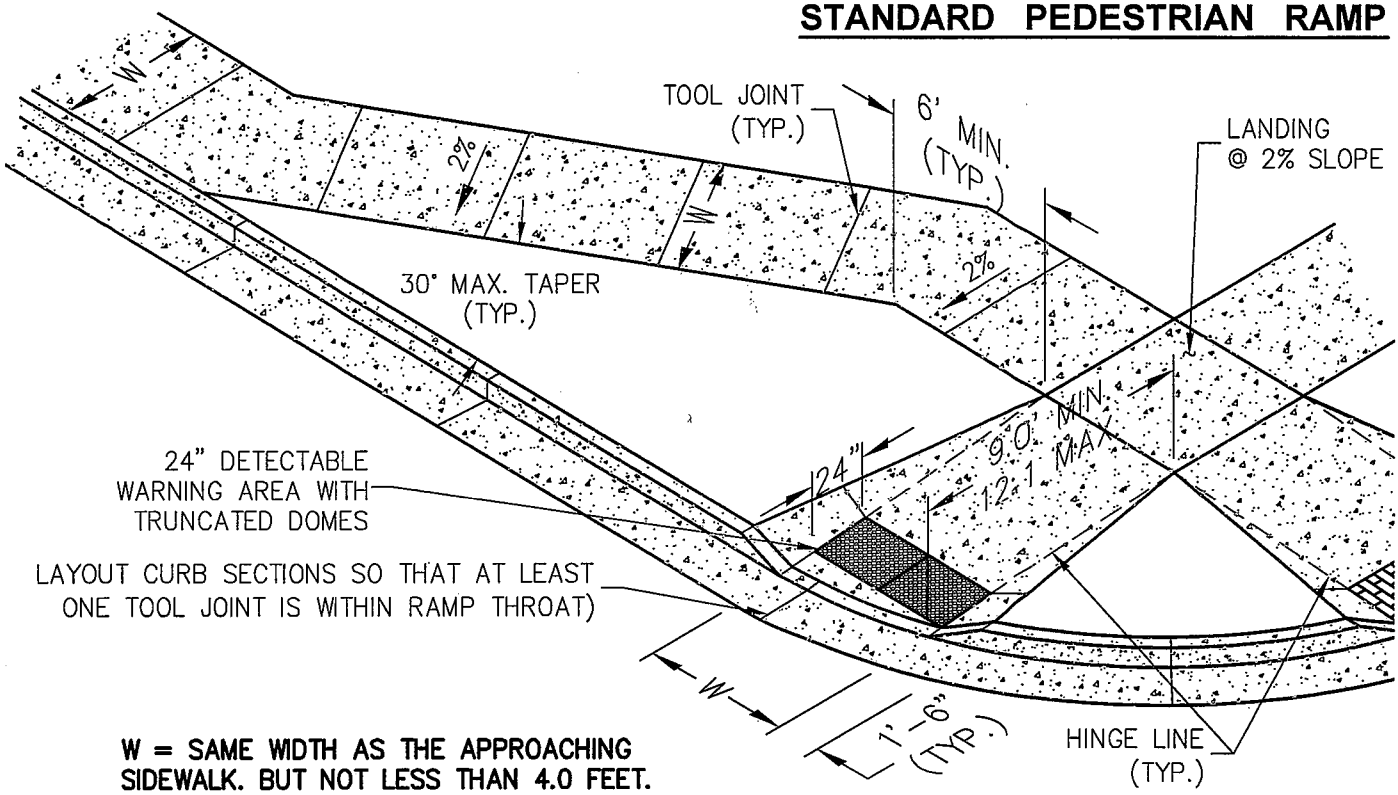

W = SAME WIDTH AS THE APPROACHING SIDEWALK. BUT NOT LESS THAN 4.0 FEET.

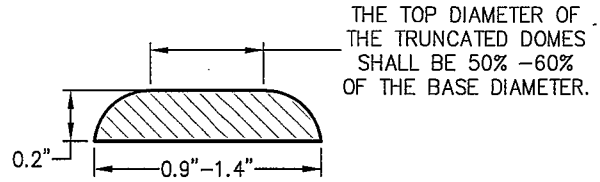

ELEVATION VIEW

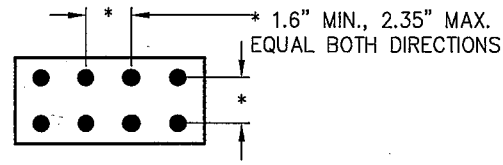

DOME SPACING

TRUNCATED DOME DETAILS

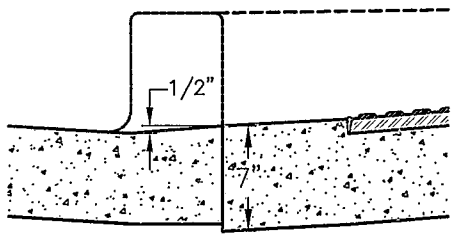

FLOWLINE TO RAMP RISE

GENERAL NOTES

1. All work shall be done in accordance with current City of Colorado Springs Engineering Division Standard Specifications.
2. Contractor to obtain required Concrete Permits prior to construction.
3. Contractor to notify Engineering Division Inspection Office at least 24 hours prior to placement of any concrete.
4. Pedestrian ramps with 24" detectable warning area shall be 4000 psi, plain concrete, with a coarse broom finish perpendicular to direction of travel.
5. Contractor shall stamp their company name and construction date within the pedestrian ramp area.
6. Ramp location and length may require modification to maintain the 12:1 maximum running slope due to intersection street grades and/or alignment.
7. Where the 1'–6" flared side(s) of a perpendicular curb ramp is (are) contiguous with a pedestrian or hard surface area, the flare width shall be increased to 8' minimum and the maximum flare slope shall not exceed 10:1.
8. Pedestrian walkway and/or location of existing or future pedestrian ramps on opposite corners shall be reviewed before constructing new ramps. New ramps shall align with existing ramps and pedestrian walkway.
9. At marked pedestrian crossings, the bottom of the ramps, exclusive of the flare sides, shall be totally contained within the markings.
10. Detectable warning area shall be prefabricated reddish integrally colored truncated–dome surfaced concrete pavers or the pre–cast panels from the City's approved product list.

CITY OF COLORADO SPRINGS

PEDESTRIAN RAMP GENERAL DETAILS

Approved By: Gary R. Hayes City Engineer

Drawn By: J.Niño Date: Jan.,2005 STD. D–8A

STANDARD PEDESTRIAN RAMP

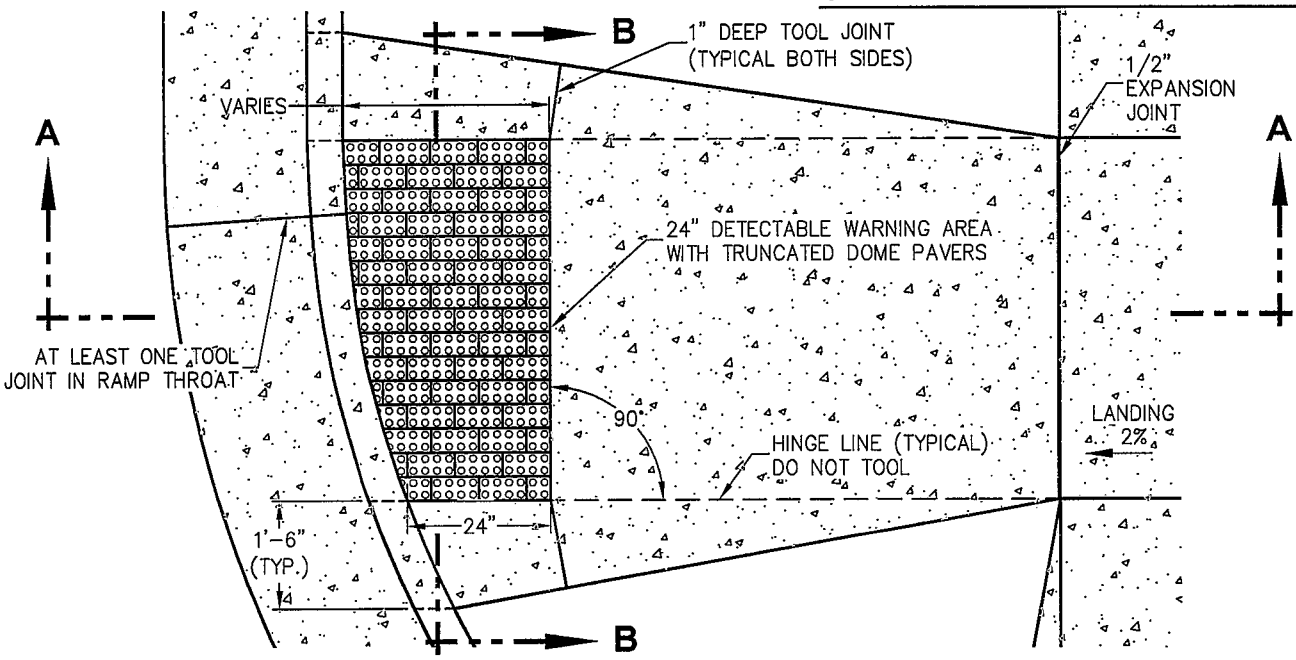

RAMP WITH DETECTABLE PAVERS

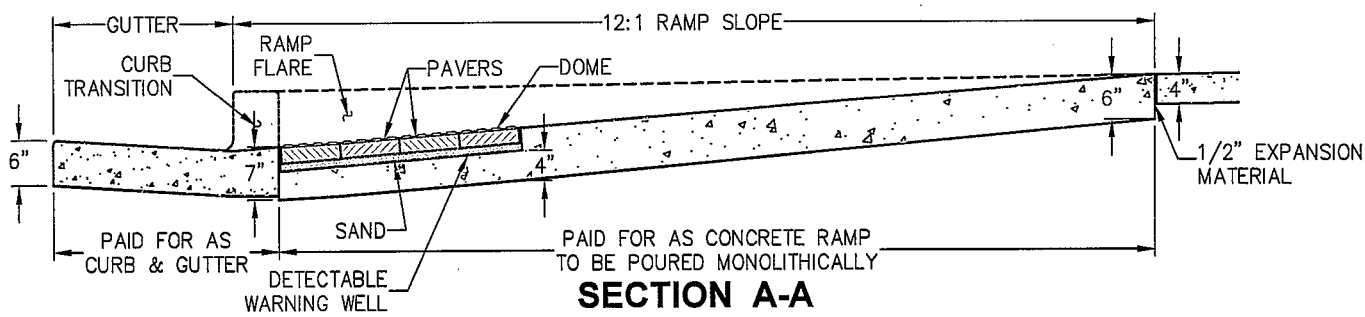

SECTION A-A

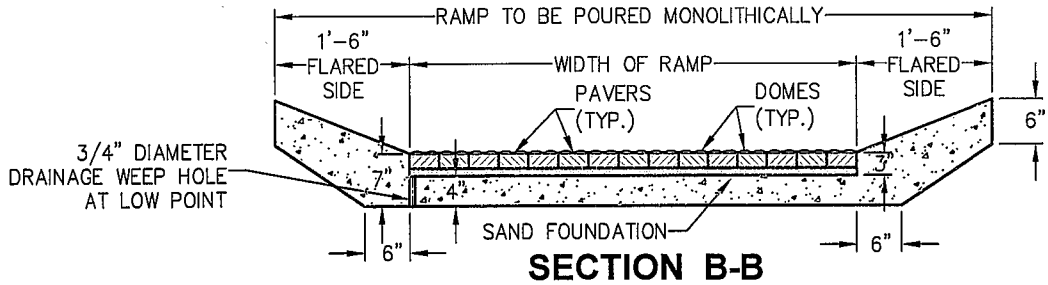

SECTION B-B

NOTES

1. Detectable warning pavers shall be prefabricated reddish integrally colored truncated domes surfaced concrete or masonry pavers. Pavers shall meet the requirements of ASTM C 902 or ASTM C 936 and comply with ADA requirements.
2. Prior to start of work, Contractor shall submit, to City Engineering for approval, a sample paver and documentation from the manufacturer. Pavers surface shall have a minimum of 70% light reflectivity contrast with the adjoining surface.
3. Well for pavers shall be accurately blocked out to ensure proper depth, alignment, and uniform grade. Only full width pavers shall be used to obtain specified ramp throat width.
4. Pavers shall be placed in the running pattern shown, domes placed in a square grid and aligned in the direction of travel. Pavers shall be installed so that the bases of the truncated domes are at the same elevation as the adjoining ramp surface.
5. Sand for bedding material shall conform to ASTM C 33. Sand to be placed between joints shall conform to ASTM C 144.
6. Bedding sand shall be screed to the appropriate depth ahead of the pavers installation. A plate vibrator shall be used to embed the pavers into the sand. Any pavers that are damaged during transport or installation will be rejected and shall be replaced at the Contractor's expense.
7. When cut pavers are required, cut sections shall not significantly impact overall truncated domes pattern and cut domes shall be beveled at a 45-degree angle to create a smooth transition.
8. Joint spacing shall be in accordance with the manufacturer's recommendations, but shall not be more than 1/8". Joints shall be filled completely with joint sand. Excess sand shall be removed by sweeping.

CITY OF COLORADO SPRINGS

PEDESTRIAN RAMP DETAILS FOR DETECTABLE PAVERS

Approved By:	Gary R. Harper, City Engineer	
Drawn By: J.Niño	Date: Jan., 2005	STD. D-88

STANDARD PEDESTRIAN RAMP

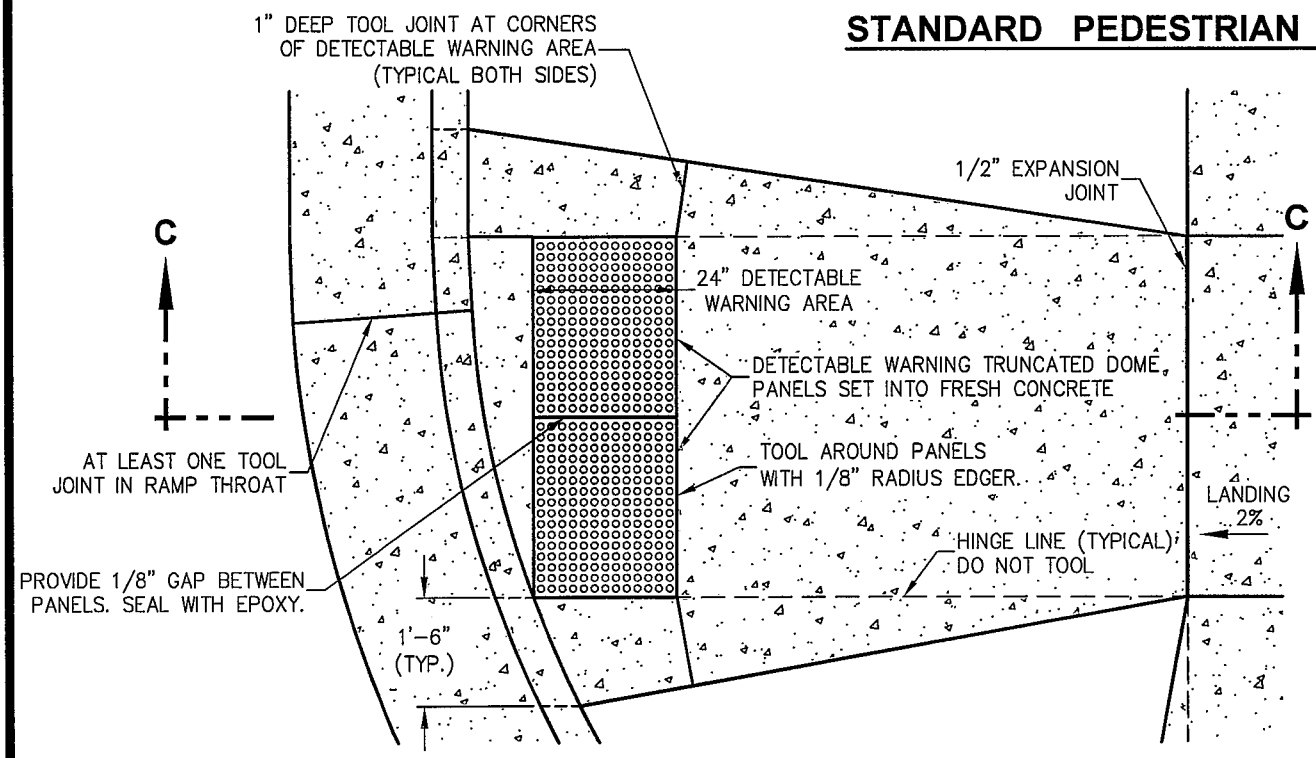

RAMP WITH DETECTABLE WARNING PANELS

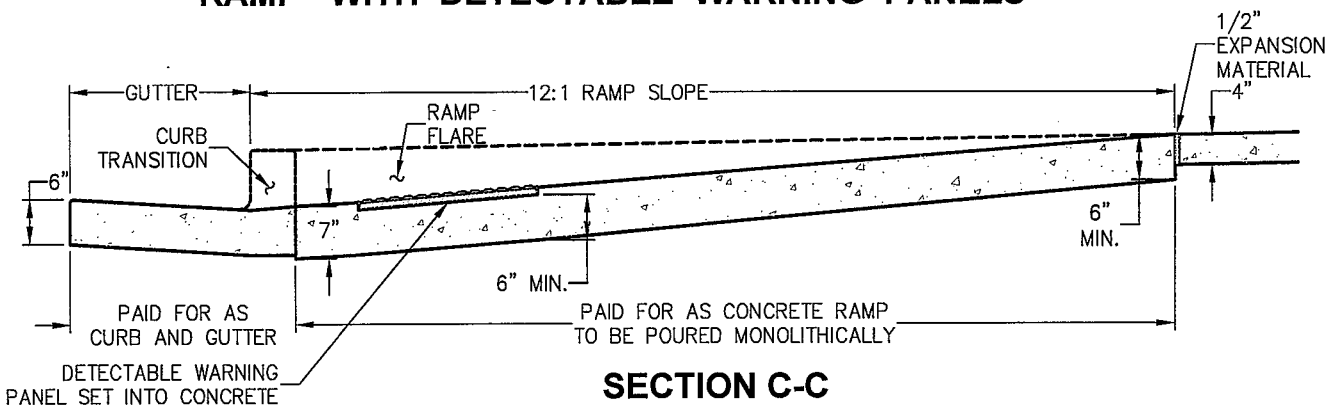

SECTION C-C

NOTES

1. Detectable warning panels, 24" x 24" or 24" x 30" in size, shall be prefabricated reddish integrally colored concrete with truncated domes and comply with ADA requirements. Only full panels shall be used to obtain specified ramp throat width, (i.e. two 24" panels for a 4' ramp, two 30" panels for a 5' ramp, etc.)
2. Prior to start of work, Contractor shall submit, to City Engineering for approval, a sample panel and documentation from the manufacturer. Panel surface shall have a minimum of 70% light reflectivity contrast with the adjoining surface.
3. Panels shall be placed as shown, with dome pattern in a square grid and aligned in the direction of travel. A steel template shall be used to ensure proper alignment and uniform grade.
4. Remove the proper amount of concrete within the template for an accurate installation. Once to the proper depth, float the area to receive the panels until a smooth paste has developed.
5. Wet the back side of each panel and trowel some concrete paste over the wet surface for better adherence.
6. Set the first panel on the freshly prepared surface. Do not press down hard on the panel, but preferably twist from side to side. Set panel with rubber mallet to proper depth so that the base of the truncated dome is at the same elevation as the adjoining ramp surface.
7. Set successive panels with a tight butt joint against the previously set panel. Provide a 1/8" gap between panels.
8. Float fresh concrete around panels. Finish and broom surrounding concrete as specified. Clean any concrete off panels with a sponge.
9. Provide 1"deep tool joints at corners of detectable warning area, and tool around panels with 1/8" radius edger.
10. When cut panels are required, cut sections shall not significantly impact overall truncated domes pattern and cut domes shall be beveled at a 45-degree angle to create a smooth transition.
11. Any panels that are damaged during transport or installation will be rejected and shall not be installed.
12. Clean out 1/8" joint(s) between panels and seal with epoxy.

CITY OF COLORADO SPRINGS

PEDESTRIAN RAMP DETAILS FOR DETECTABLE PANELS

Approved By: Gary R. Reynoso City Engineer

Drawn By: J.Niño Date: Jan., 2005 STD. D-8C

STANDARD PEDESTRIAN RAMP FOR "T" INTERSECTION

FOR NEW CONSTRUCTION

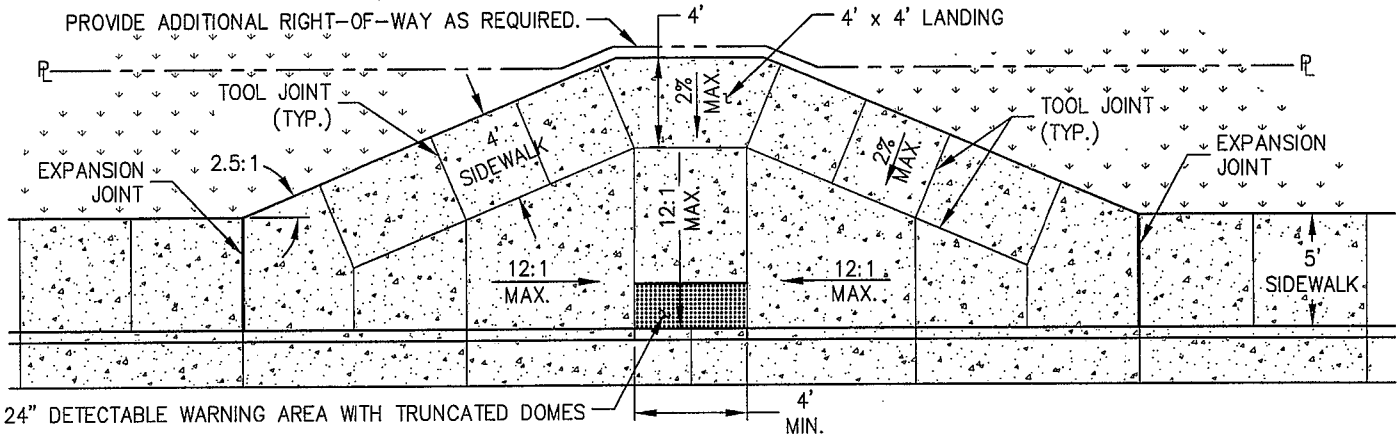

ATTACHED SIDEWALK

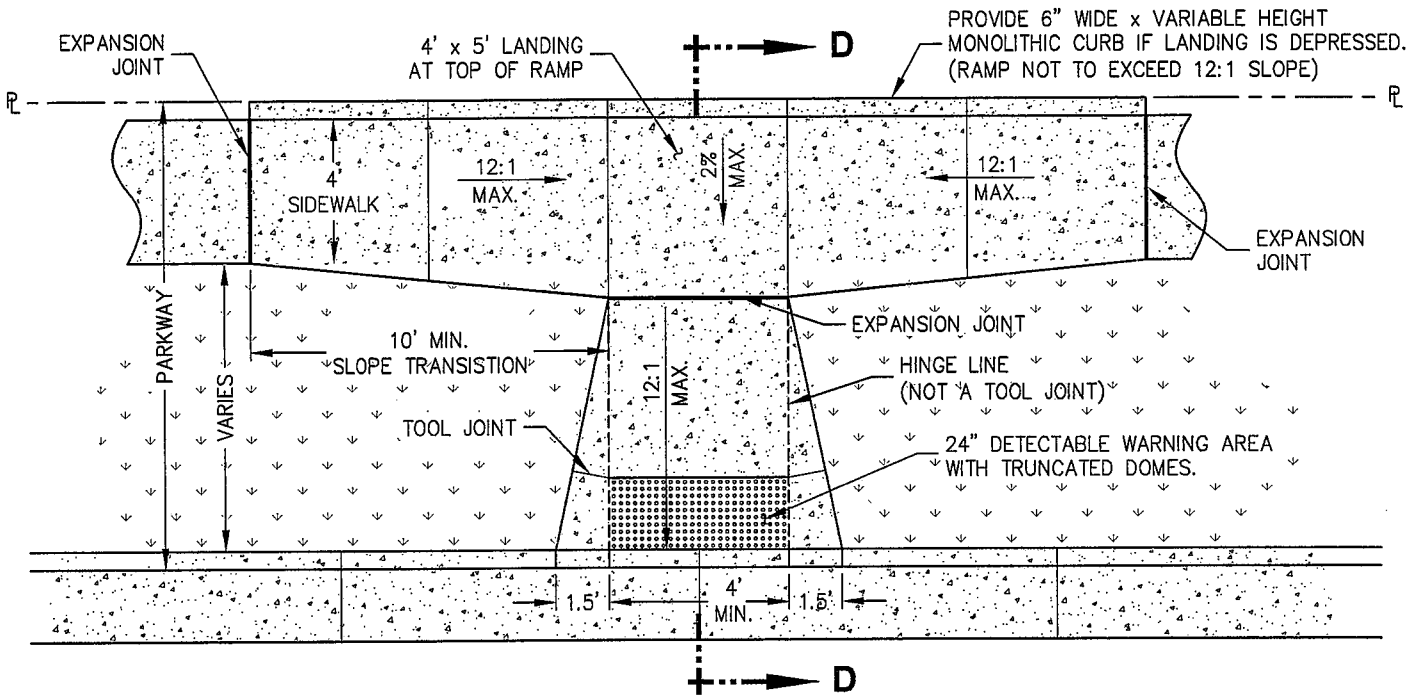

DETACHED SIDEWALK

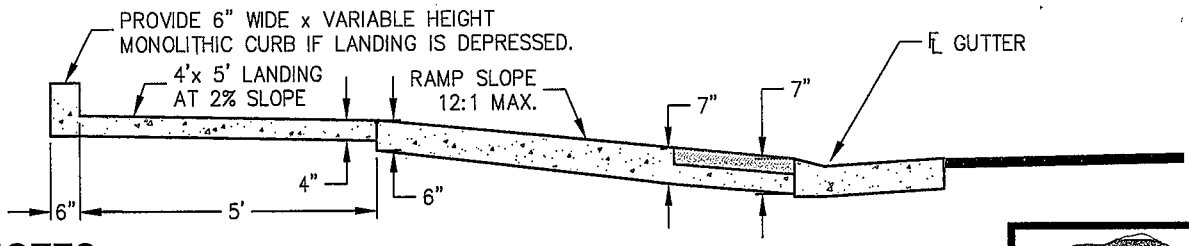

SECTION D-D

NOTES

1. See General Notes and Standard Ramp Details
2. Ramps shall align with each other across the street.
3. Monolithic curb height at depressed landing shall be equal to the amount the landing is lowered. i.e if landing is lowered 4" the curb height would be 4".
4. If the landing is lowered 2" or less the monolithic curb at the back of walk may be deleted.
5. If no curb is constructed at the back of walk the landing depth may reduced from 5' to 4'.

CITY OF COLORADO SPRINGS

PEDESTRIAN RAMP DETAILS FOR "T" INTERSECTION

Approved By: City Engineer

Drawn By: J.Nino | Date: Mar.,2005 | STD. D-8D

C:\Juan\PROJECTS\2005\Ped Ramp Stds\STD D-8D.dwg, 3/15/2005 3:12:06 PM, Proj. Eng.: Jerry Banks, Eng. Tech.: J Nino

TYPICAL RAMP LAYOUT FOR "T" INTERSECTIONS

FOR NEW CONSTRUCTION

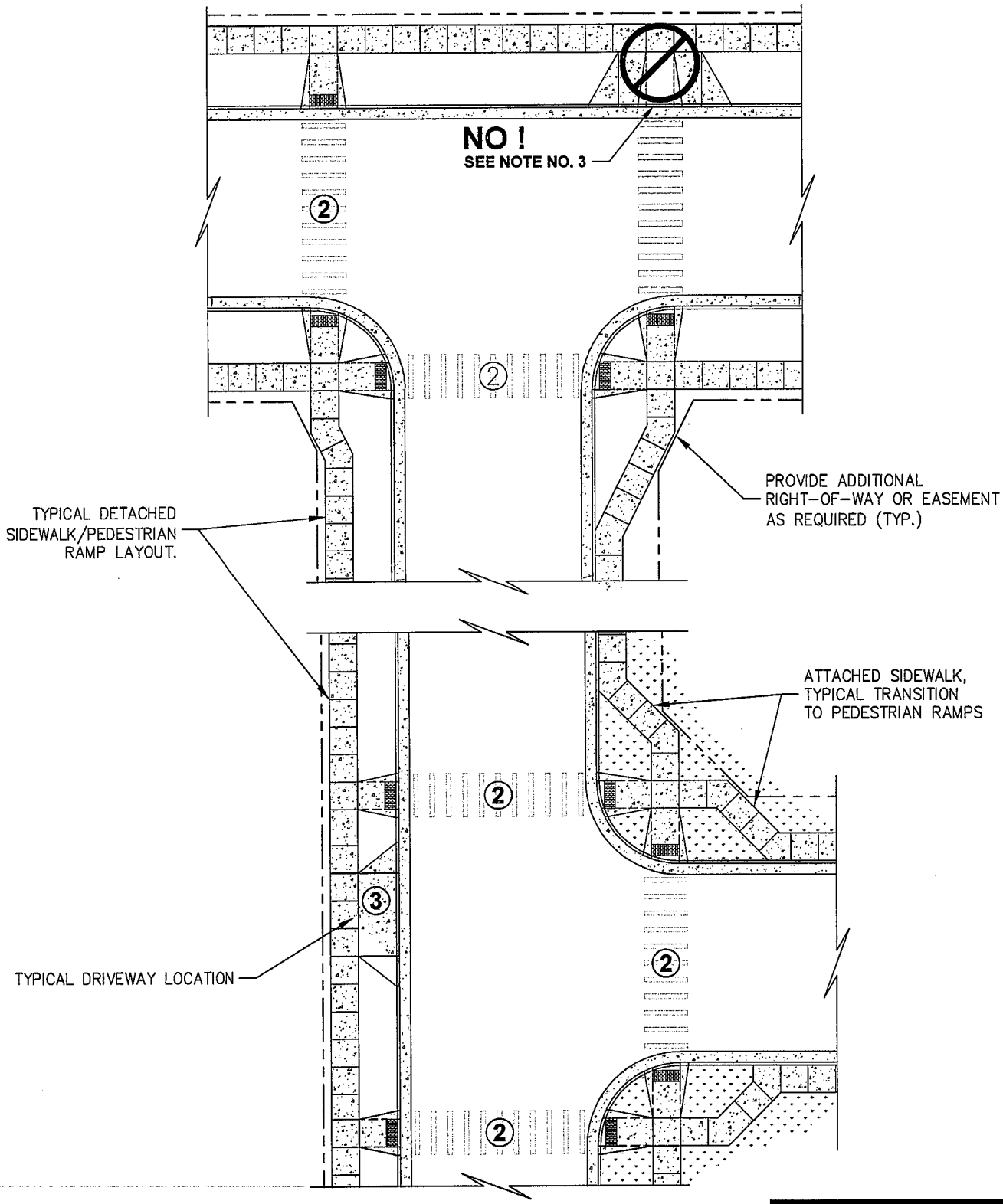

NOTES

1. See General Notes and Standard Ramp Details.
2. Ramps shall align with each other across the street.
3. Driveway can not be used as pedestrian ramps. Driveways shall be separated from, and not conflict with pedestrian ramps across the street.

CITY OF COLORADO SPRINGS

PEDESTRIAN RAMP LAYOUT FOR "T" INTERSECTIONS

Approved By: City Engineer

Drawn By: J.Niño | Date: Mar., 2005 | STD. D-8E

C:\Juan\PROJECTS\2005\Ped Ramp Stds\STD D-8E.dwg, 3/15/2005 3:20:15 PM, Proj. Eng.: Jerry Banks, Eng. Tech.: J Nino

TYPICAL RAMP LAYOUT AT A MAJOR INTERSECTION WITH A DECELERATION LANE OR RIGHT TURN ISLAND

FOR NEW CONSTRUCTION

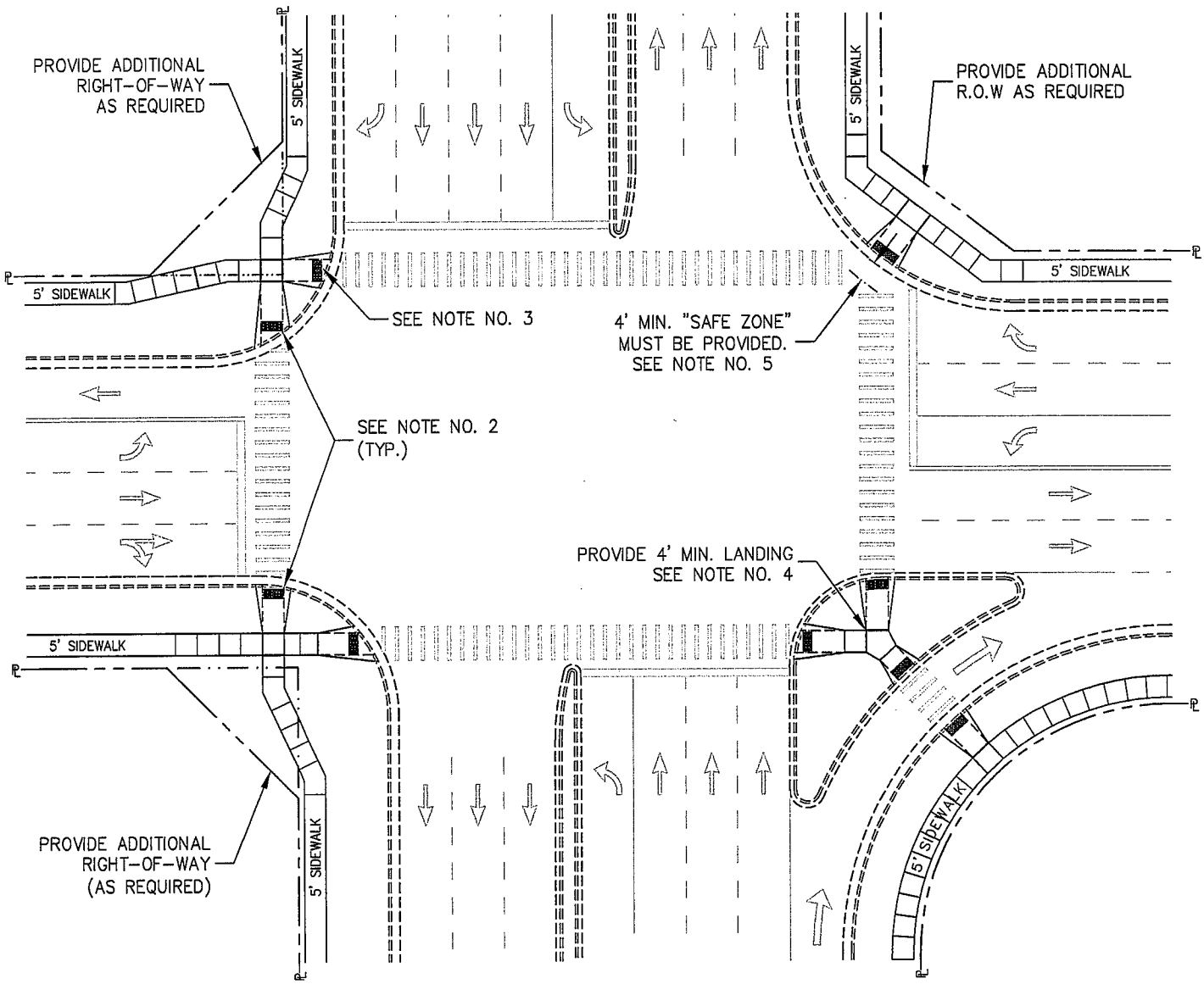

NOTES

1. See General Notes and Standard Ramp Details.
2. Ramps shall align with each other across street. Ramp locations shown may need to be modified to maintain a perpendicular crossing.
3. The entire ramp throat must be contained within the marked crossings.
4. Ramps with a minimum 4' landing or a curbed cut-through shall be provided at islands and medians (See Standard Specifications "D-8G").
5. If approved for a specific intersection a radial ramp may be used if it provides the best crosswalk location/alignment, and 4' minimum "Safe Zone". The Safe Zone shall be beyond the lip of the gutter within the marked crossings and outside the through traffic lanes.

CITY OF COLORADO SPRINGS

PEDESTRIAN RAMP DETAILS FOR MAJOR INTERSECTIONS

Approved By: City Engineer

Drawn By: J.Niño | Date: Mar., 2005 | STD. D-8F

C:\Juan\PROJECTS\2005\Ped Ramp Stds\STD D-8F.dwg, 3/15/2005 10:55:50 AM, Proj. Eng.: Jerry Banks, Eng. Tech.: J Niño

ALTERNATE RADIAL PEDESTRIAN RAMP

FOR RETROFIT APPLICATIONS

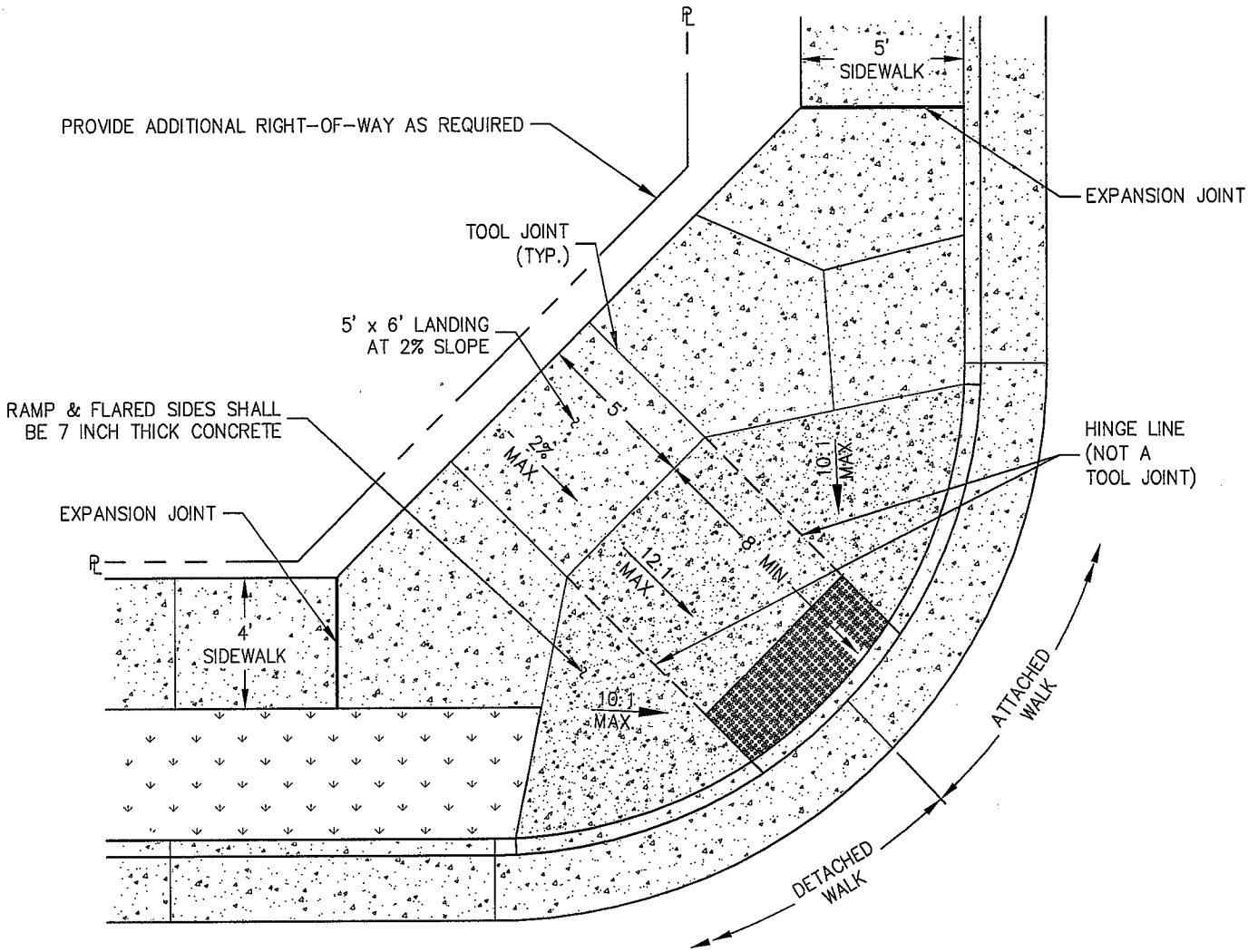

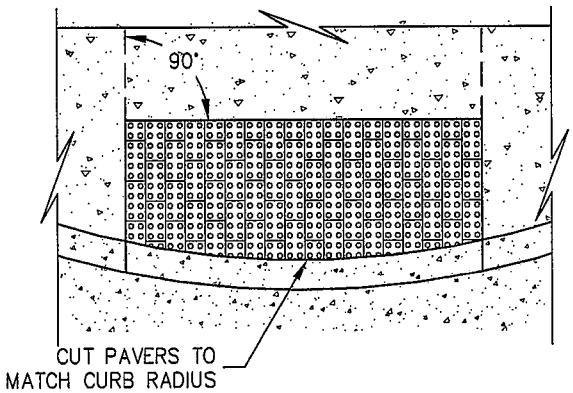

PAVER DETAIL

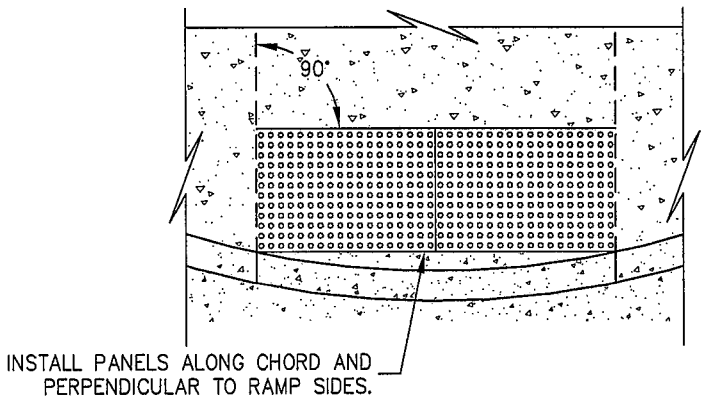

PANEL DETAIL

NOTES

1. See General Notes and Standard Ramp Details.
2. Ramps shall align with each other across the street.
3. For retrofit applications only.
4. Not for new construction.

CITY OF COLORADO SPRINGS

ALTERNATE RADIAL PEDESTRIAN RAMP DETAILS

Approved By: City Engineer

Drawn By: J.Niño | Date: Mar., 2005 | STD. D-8H

C:\Juan\PROJECTS\2005\Ped Ramp Stds\STD D-8H.dwg, 3/15/2005 11:10:09 AM, Proj. Eng.: Jerry Banks, Eng. Tech.: J Nino

ALTERNATE COMBINATION PEDESTRIAN RAMPS

FOR RETROFIT APPLICATIONS

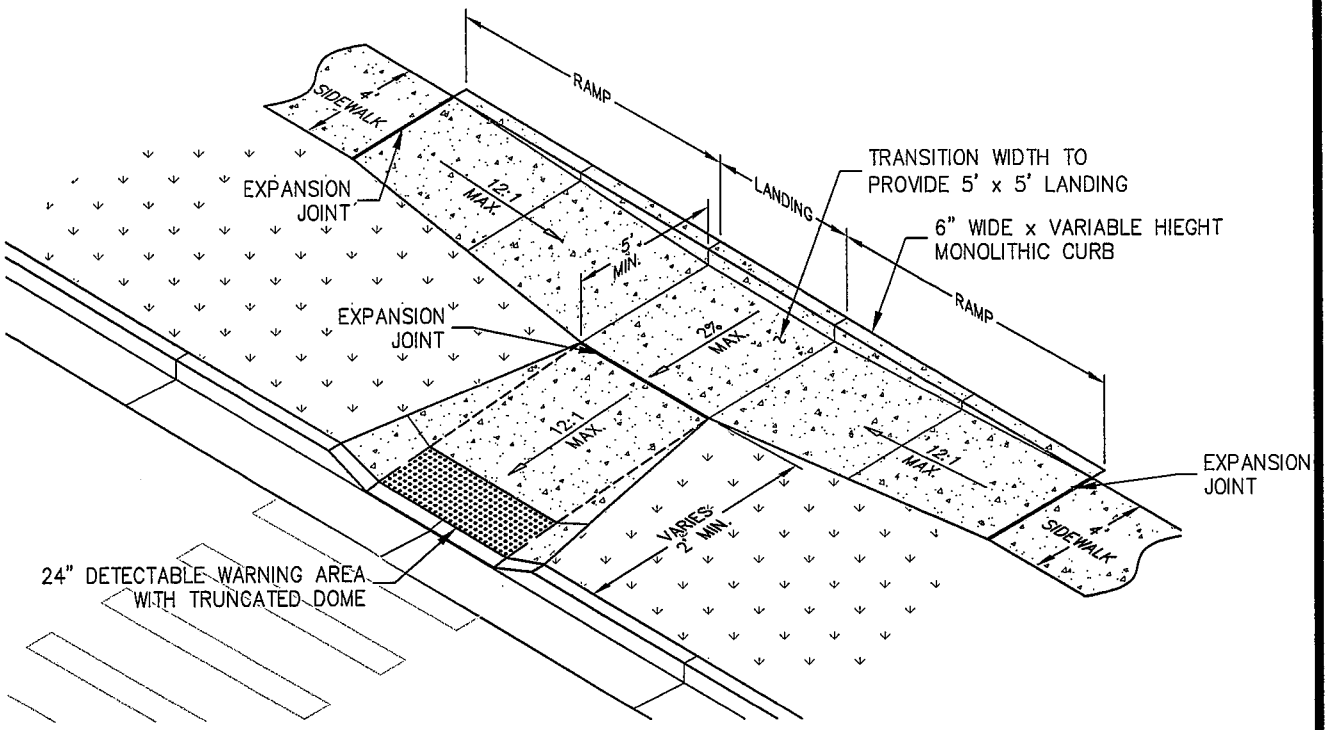

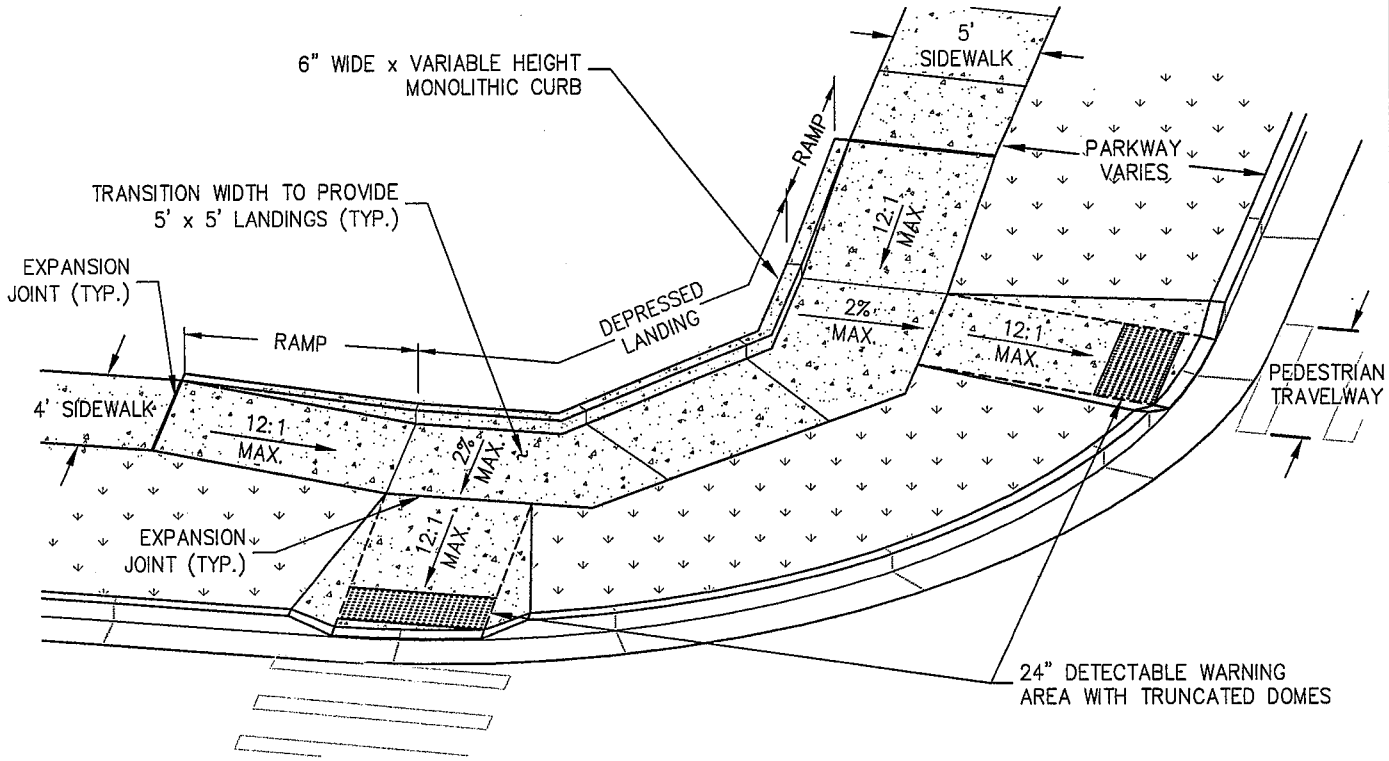

NOTES

1. See General Notes and Standard Ramp Details.
2. Ramps shall align with each other across the street.
3. For retrofit applications <u>only</u>, where parkway width is too narrow to provide standard ramp length.
4. Not for new construction.
5. Design shall provide positive drainage of depressed landing.

CITY OF COLORADO SPRINGS

ALTERNATE COMBINATION PEDESTRIAN RAMP DETAILS

Approved By: City Engineer

Drawn By: J.Niño | Date: Mar., 2005 | STD. D-81

C:\Juan\PROJECTS\2005\Ped Ramp Stds\STD-D-81.dwg, 3/15/2005 11:33:50 AM, Proj. Eng.: Jerry Banks, Eng. Tech.: J Nino

ALTERNATE PARALLEL RAMPS FOR MID-BLOCK OR "T" INTERSECTION

FOR RETROFIT APPLICATIONS

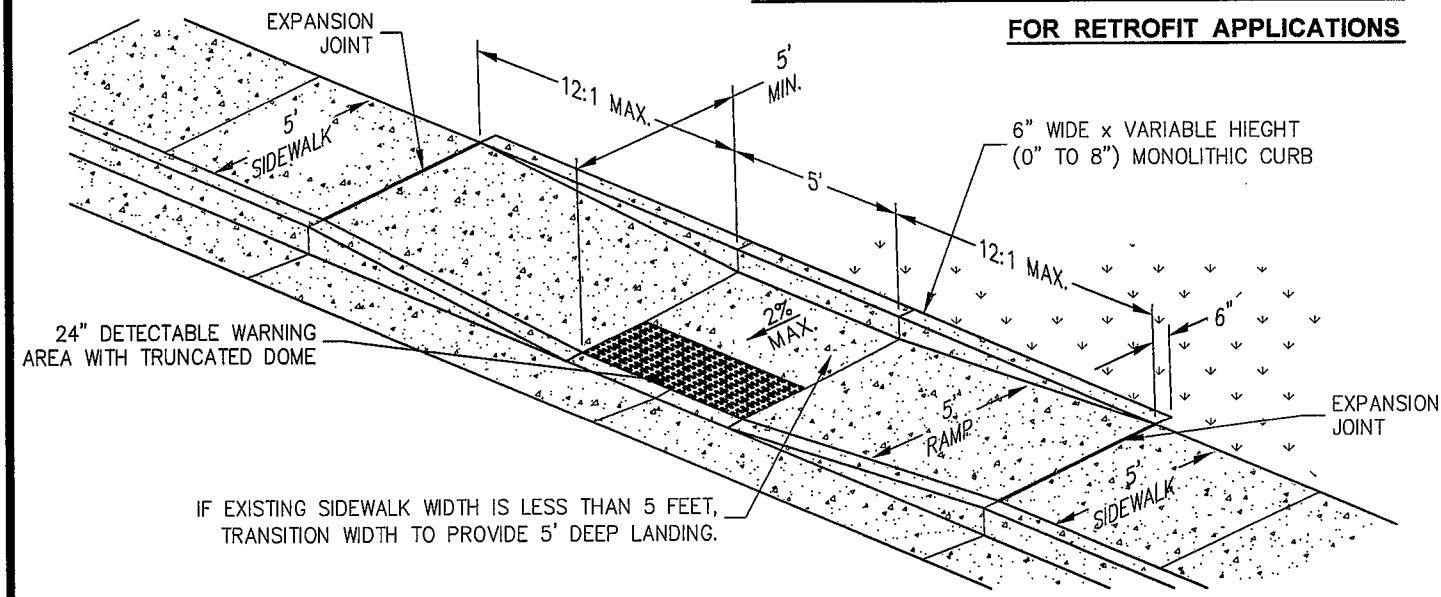

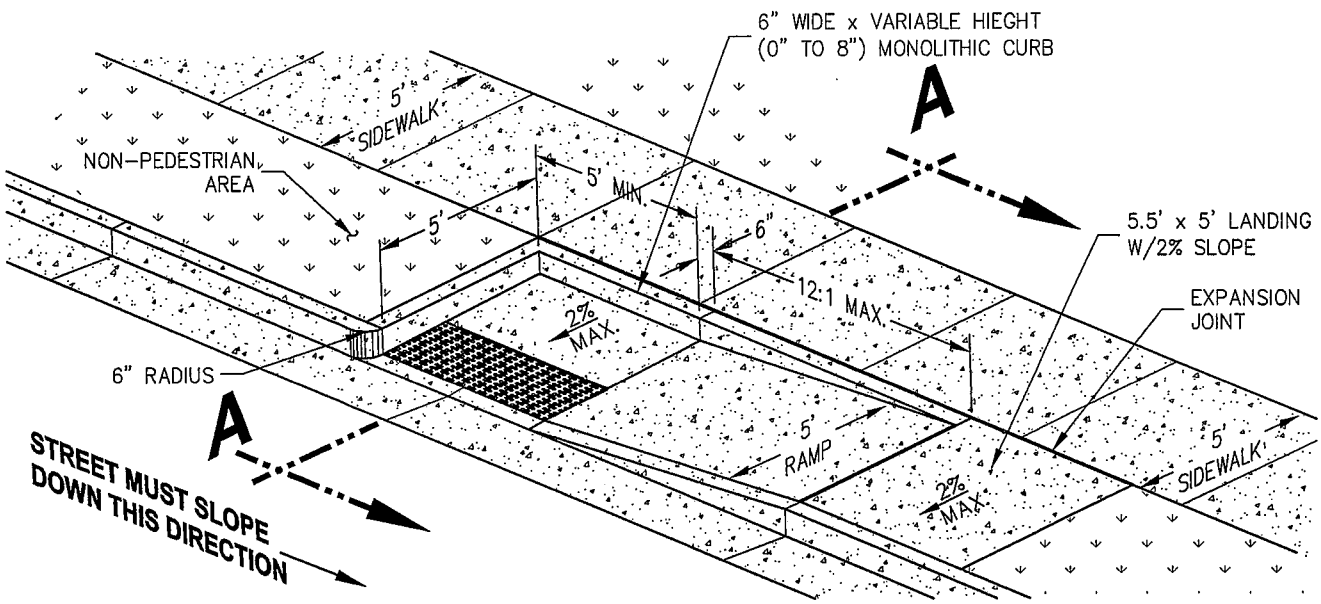

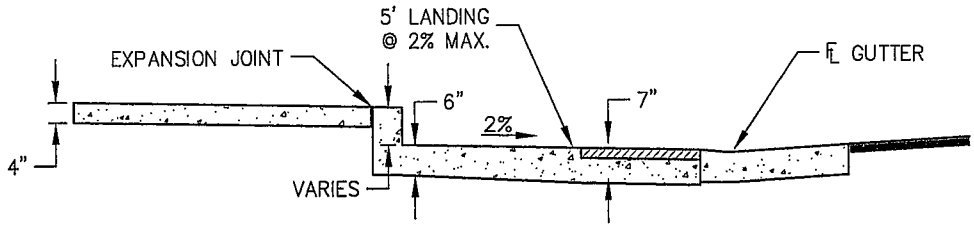

SECTION A - A

NOTES

1. See General Notes and Standard Ramp Details.
2. Ramp shall align with the ramp across the street.
3. For retrofit applications <u>only</u>, where combined ramps can not be constructed due to limited Right-of-Way, existing buildings, etc.
4. A single ramp may only be used if drainage is not a concern and the opposite side of the landing is protected by a non-pedestrian area (i.e. landscaping, tree well, etc.). Ramp drop-offs may also need to be protected with a railing or barrier.
5. Not for new construction.

CITY OF COLORADO SPRINGS

ALTERNATE PARALLEL PEDESTRIAN RAMP DETAILS MID-BLOCK OR "T" INTERSECTION

Approved By: City Engineer

Drawn By: J.Niño | Date: Mar., 2005 | STD. D-8J

C:\Juan\PROJECTS\2005\Ped Ramp Stds\STD D-83.dwg, 3/15/2005 3:24:21 PM, Proj. Eng.: Jerry Banks, Eng. Tech.: J Niño

ALTERNATE PARALLEL PEDESTRIAN RAMP FOR CORNERS

FOR RETROFIT APPLICATIONS

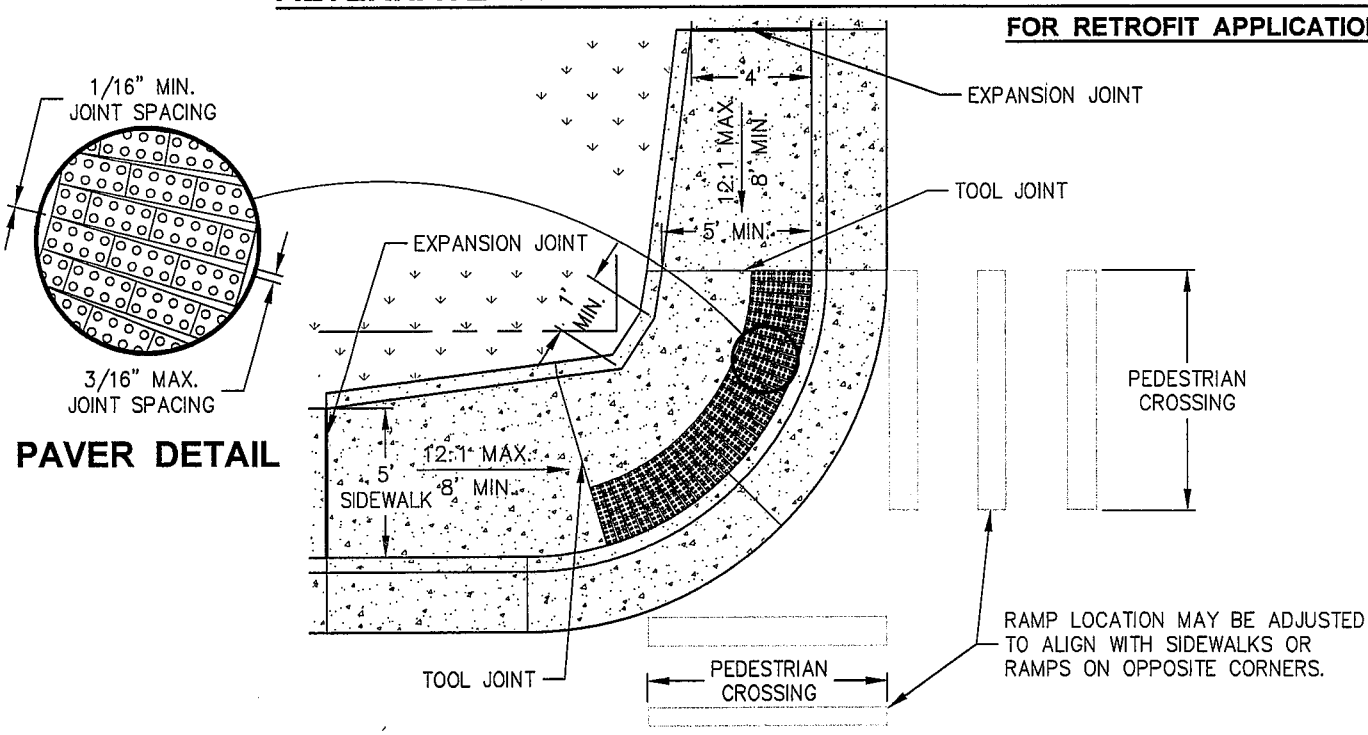

RAMPS WITH DETECTABLE PAVERS

CUT FRONT OF PANELS TO CONFORM TO CURB RADIUS. CUT TWO EQUAL TAPERING WEDGES FROM SIDES OF ADJACENT PANELS TO FIT RADIUS. ALL CUTS SHALL BE STRAIGHT AND UNIFORM TO PROVIDE 1/8" GAPS BETWEEN PANELS. BEVEL ANY CUT DOMES AT A 45° ANGLE TO PROVIDE A SMOOTH TRANSITION.

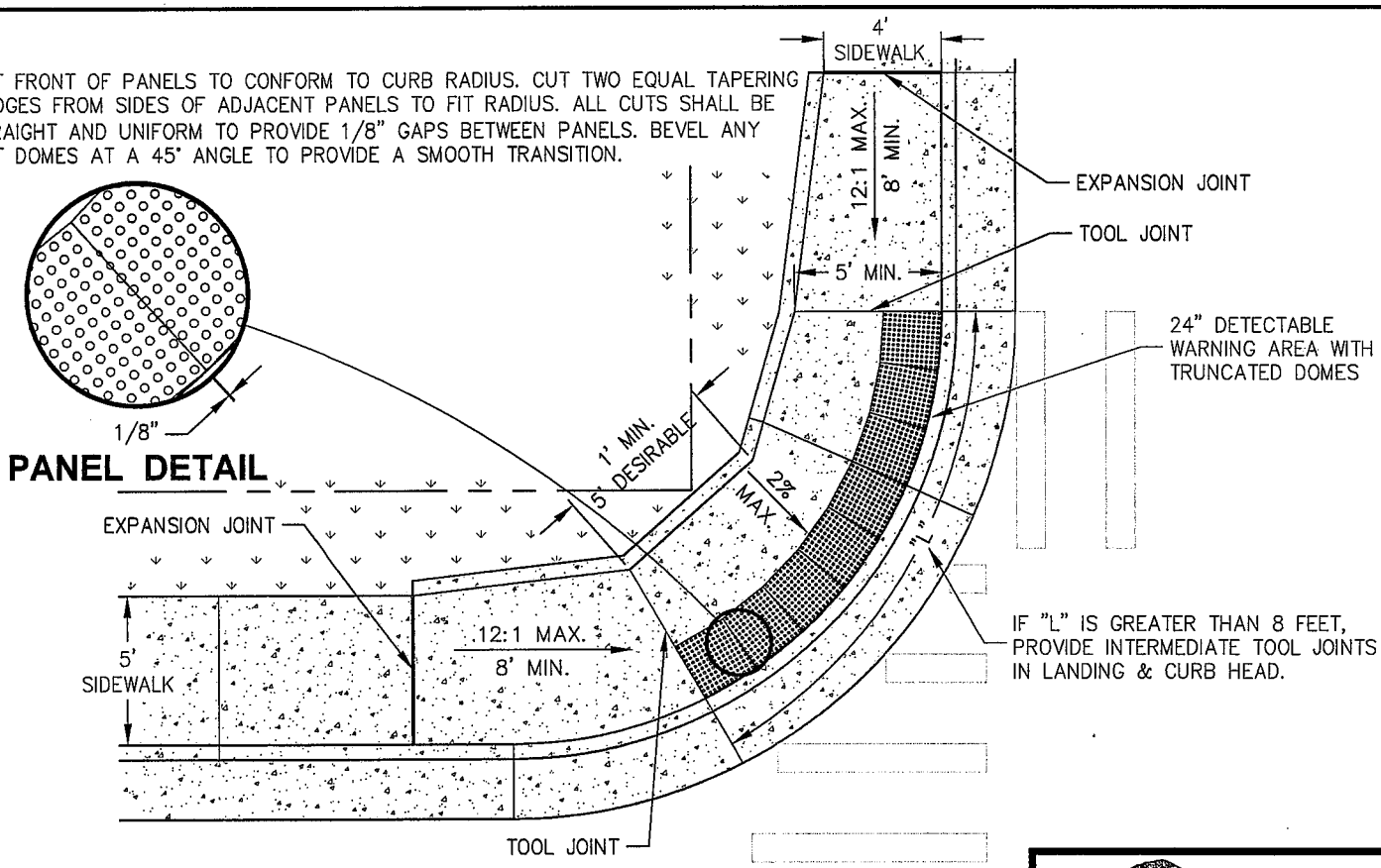

RAMPS WITH DETECTABLE PANELS

NOTES

1. See General Notes and Standard Ramp Details.
2. Ramp shall align with the ramps across the street.
3. For retrofit applications <u>only</u>, where combined ramps can not be constructed due to limited Right-of-Way, existing buildings, etc.
4. Not for new construction.

CITY OF COLORADO SPRINGS

ALTERNATE PARALLEL PEDESTRIAN RAMP DETAILS FOR CORNERS

Approved By: City Engineer

Drawn By: J.Niño Date: Mar., 2005 STD. D-8K

C:\Juan\PROJECTS\2005\Ped Ramp Stds\STD D-8K.dwg, 3/15/2005 3:33:50 PM, Proj. Eng.: Jerry Banks, Eng. Tech.: J Nino

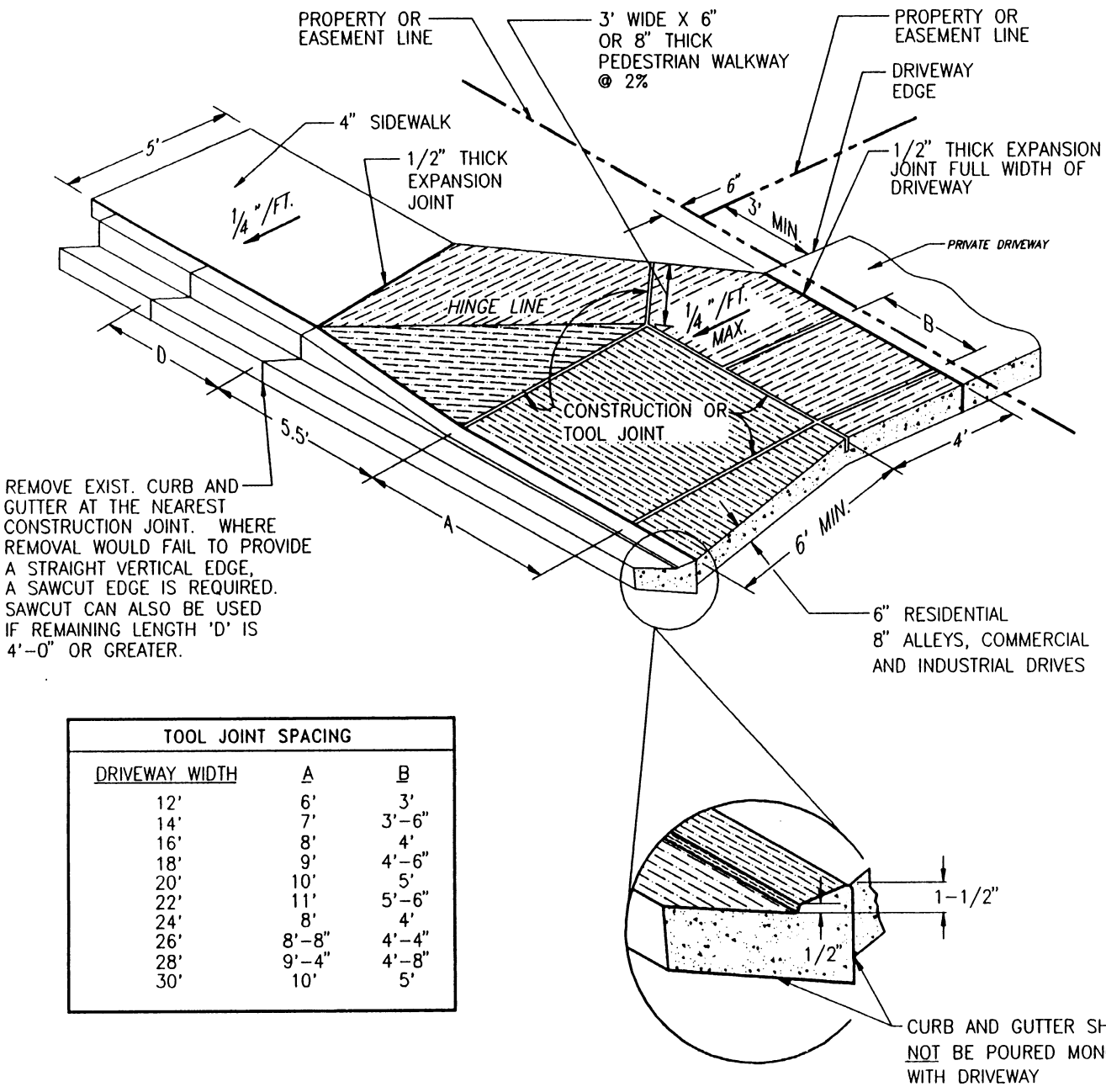

TOOL JOINT SPACING		
DRIVEWAY WIDTH	A	B
12'	6'	3'
14'	7'	3'-6"
16'	8'	4'
18'	9'	4'-6"
20'	10'	5'
22'	11'	5'-6"
24'	8'	4'
26'	8'-8"	4'-4"
28'	9'-4"	4'-8"
30'	10'	5'

NOTES:

1. Provide centerline construction or tool joint when driveway width (edge to edge) is 14' or greater.
2. All tool joints shall be a minimum of 1-1/2" deep.
3. When replacing existing curb and gutter with new driveway, entire curb and gutter section shall be removed and replaced with curb and gutter (variable-curb-height) as shown. Do NOT break curb from gutter section. Machine sawcut is allowable; see D-16C.
4. Flared portion of driveway shall be poured monolithic with main rectangular portion of driveway.
5. Where there is more than one driveway on a lot, 30' of full curb shall be provided between driveways.
6. Where an existing sidewalk is in place, and its thickness is less than 6" (residential) or 8"(commercial, industrial, or alley) the the sidewalk through the driveway shall be removed and replaced with Portland Cement Concrete, 6" (residential) or 8" (commercial) in thickness.
7. All excavation, embankment and concrete shall be in accordance with City Standard Specifications.
8. All provisions of Section 14-15-104 of the City Code shall be met, with regard to minimum setback from intersection and side property lines, minimum spacing, maximum width, etc.
9. When a driveway is to be taken out of service, the entire length of curb and gutter (variable-curb-height) shall be removed and replaced with new curb and gutter. Do NOT place new curb head on existing variable-curb-height curb and gutter.

ATTACHED SIDEWALK

NO SCALE

CITY OF COLORADO SPRINGS		
Standard Driveway with Detached Walk		
Approved by: Gary R. Hayes	City Engineer	
Drawn by: KLM	Date: 07/94	STD. D-16A

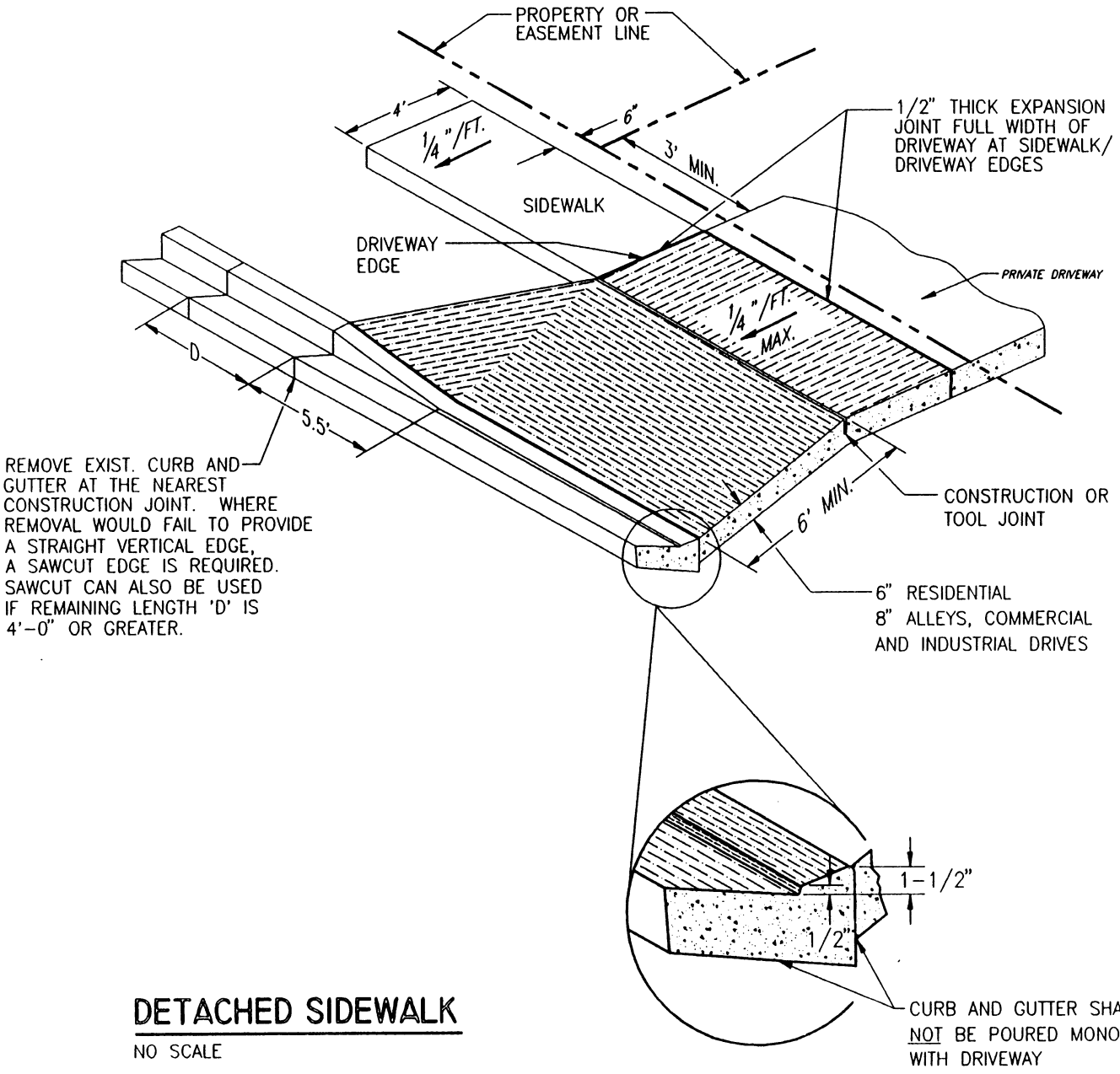

DETACHED SIDEWALK

NO SCALE

NOTES:

1. Provide centerline construction or tool joint when driveway width (edge to edge) is 14' or greater.
2. All tool joints shall be a minimum of 1-1/2" deep.
3. When replacing existing curb and gutter with new driveway, entire curb and gutter section shall be removed and replaced with curb and gutter (variable-curb-height) as shown. Do NOT break curb from gutter section. Machine sawcut is allowable; see D-16C.
4. Flared portion of driveway shall be poured monolithic with main rectangular portion of driveway.
5. Where there is more than one driveway on a lot, 30' of full curb shall be provided between driveways.
6. Where an existing sidewalk is in place, and its thickness is less than 6" (residential) or 8"(commercial, industrial, or alley) the the sidewalk through the driveway shall be removed and replaced with Portland Cement Concrete, 6" (residential) or 8" (commercial) in thickness.
7. All excavation, embankment and concrete shall be in accordance with City Standard Specifications.
8. All provisions of Section 14-15-104 of the City Code shall be met, with regard to minimum setback from intersection and side property lines, minimum spacing, maximum width, etc.
9. When a driveway is to be taken out of service, the entire length of curb and gutter (variable-curb-height) shall be removed and replaced with new curb and gutter. Do NOT place new curb head on existing variable-curb-height curb and gutter.

CITY OF COLORADO SPRINGS		
Standard Driveway with Detached Walk		
Approved by: Clay R. Hayes	City Engineer	
Drawn by: KLV	Date: 0/94	STD. D-16B

NOTES:

TO BE USED IN CONJUNCTION WITH CITY STANDARD D-16A or D-16B

① MUST BE SAW CUT FROM THE BACKSIDE OF CURB TO FLOWLINE OF GUTTER

② CUT EDGE TO BE GROUND SMOOTH (ROUNDED TO REMOVE SHARP EDGE)

③ THE 5'-6" TAPERED CURB HEAD SHALL BE CUT IN EXISTING CURB

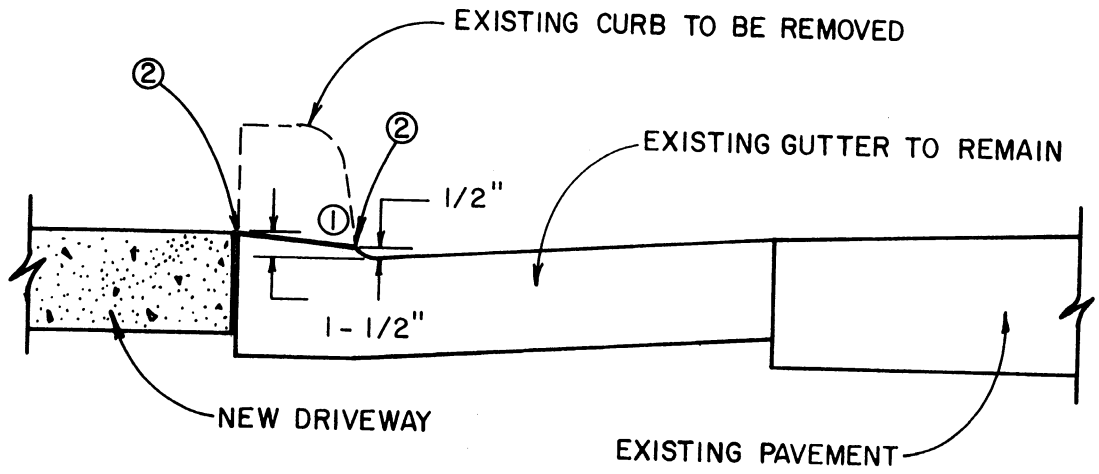

NO SCALE

CITY OF COLORADO SPRINGS, COLORADO.			
CURB CUT BY MACHINE SAW			
APPROVED BY: Gary R. Haynes CITY ENGINEER			
SCALE AS SHOWN	DATE AUG. 94	DWN BY AW	DWG D-16C

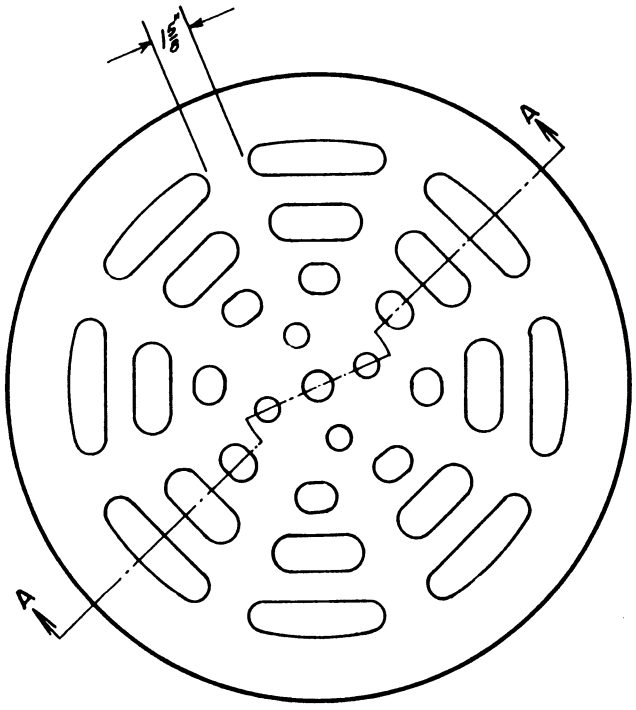

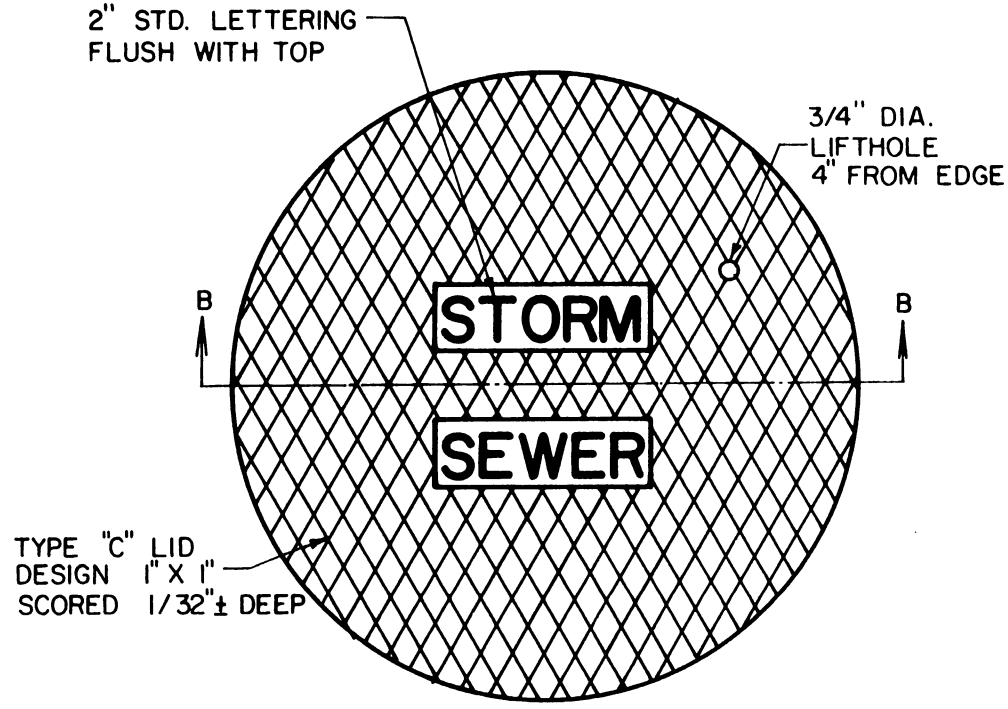

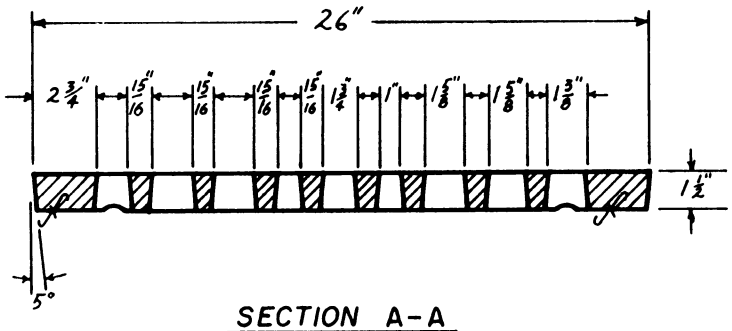

SECTION A-A

(APPROX. 175 lbs)

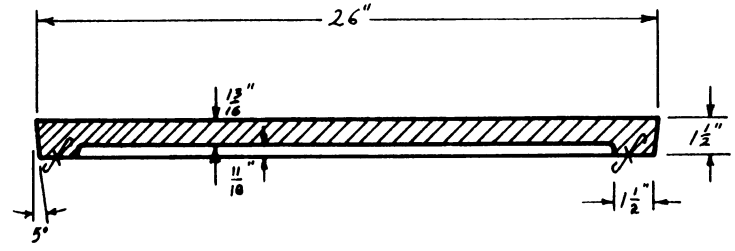

SECTION B-B

(APPROX. 144 lbs)

STORM SEWER GRATE & LID

1 1/2" = 1'-0"

CITY OF COLORADO SPRINGS			
STORM SEWER GRATE & LID			
APPROVED BY: Gary R. Haynes CITY ENGINEER			
SCALE: SHOWN	DATE: 10-84	DRW:	D-17A SHT. 1 OF 2

REVISED JAN. '89 PLB HTS ADDED

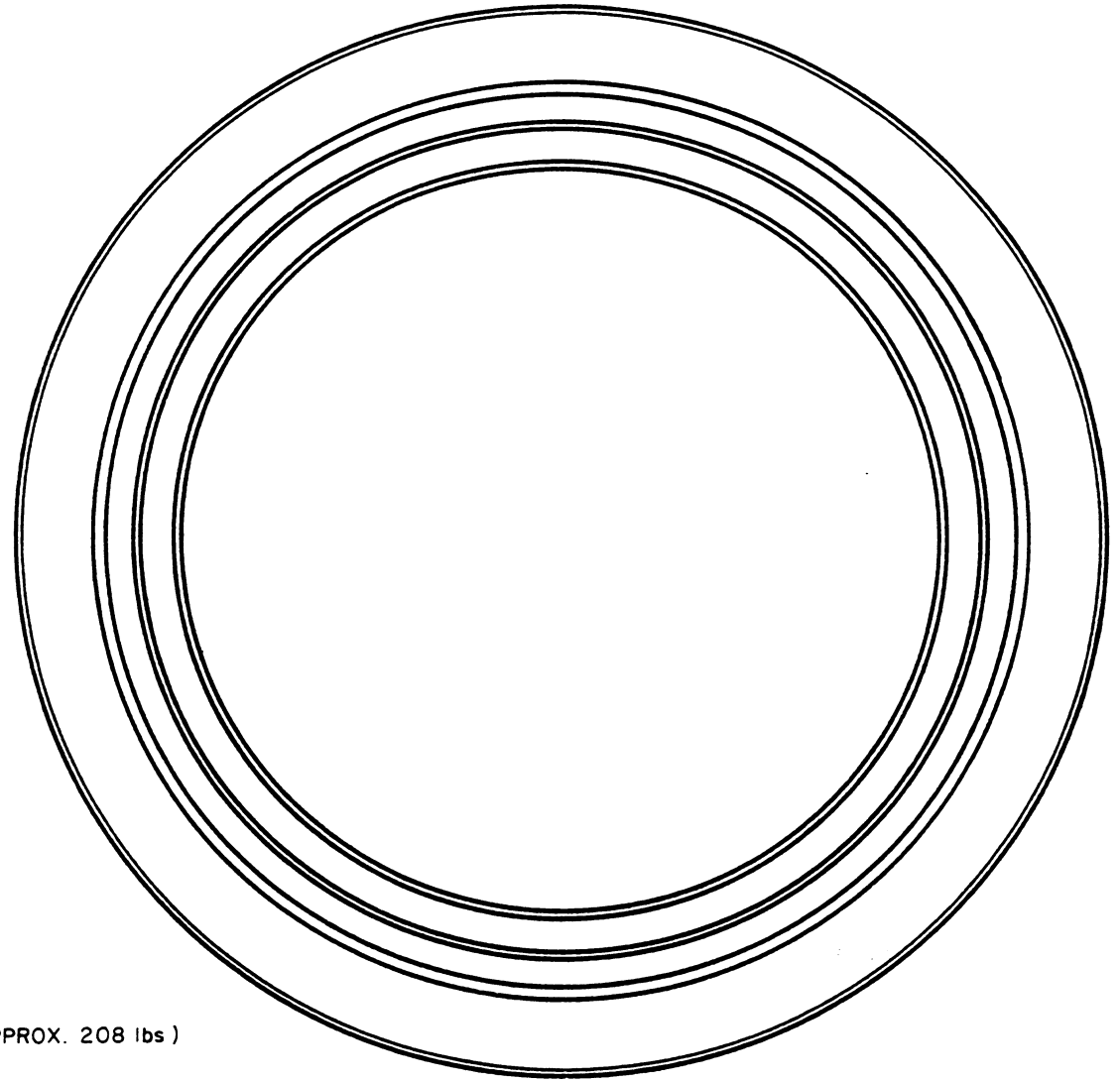

(APPROX. 208 lbs)

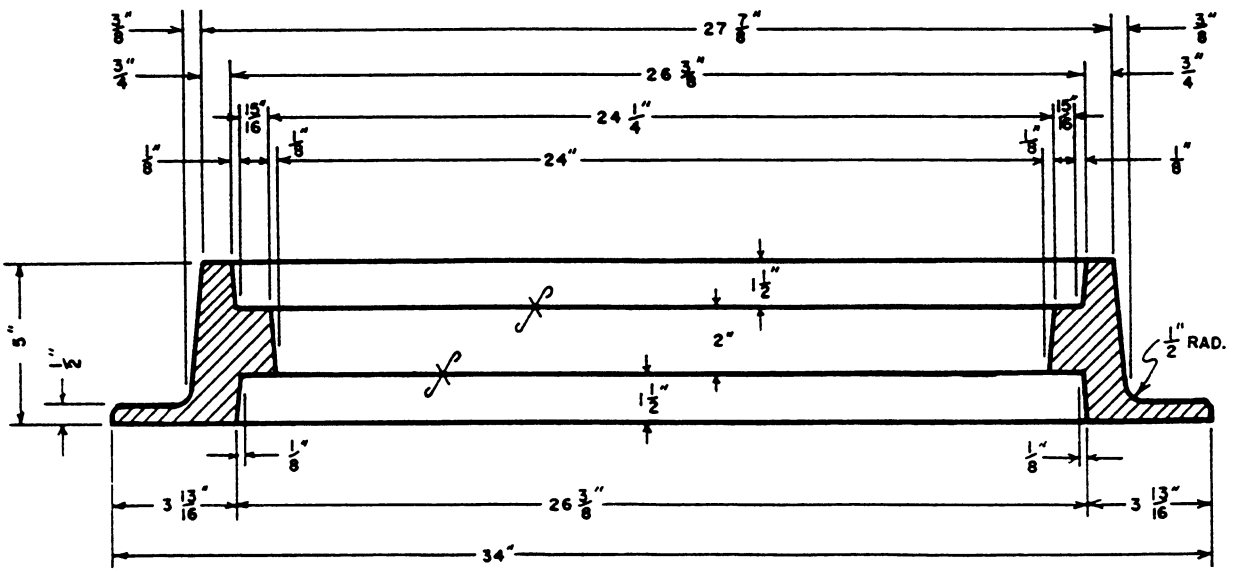

STORM SEWER REVERSIBLE FRAME

CITY OF COLORADO SPRINGS			
STORM SEWER REVERSIBLE FRAME			
APPROVED BY: Gary L. Haynes CITY ENGINEER			
SCALE: 2" = 1'	DATE: 10-84	DRW: 75	D-17.8 SHT. 2 OF 2

REVISED JAN '89 PLB WEIGHT ADDED

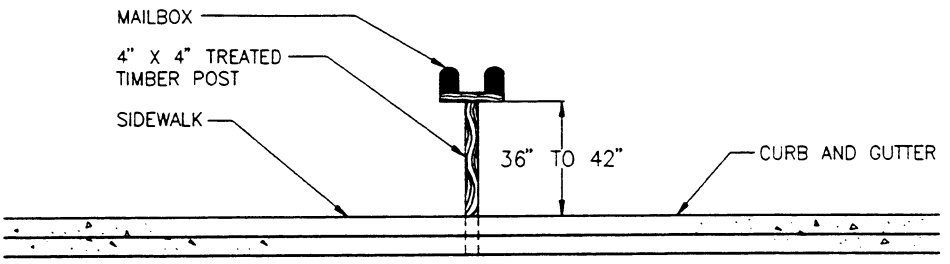

ELEVATION
SCALE: 1" = 5'

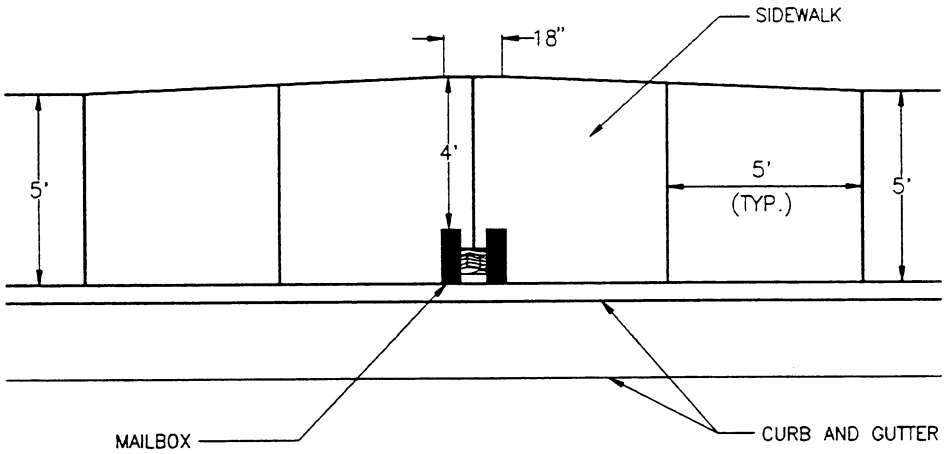

PLAN VIEW
SCALE: 1" = 5'

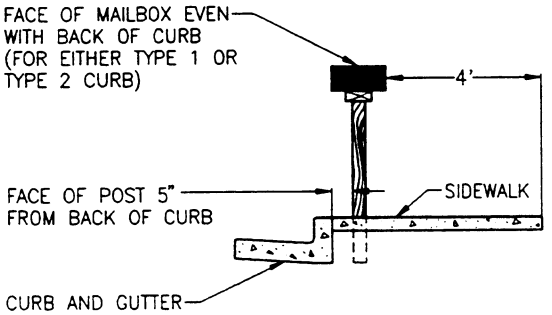

SIDE VIEW
SCALE: 1" = 5'

NOTES:

1. MAILBOX & POST DIMENSIONS AS REQUIRED BY U. S. POSTAL SERVICE.
2. MAILBOX LOCATION SUBJECT TO U. S. POSTAL SERVICE APPROVAL.

CITY OF COLORADO SPRINGS			
Sidewalk Taper Section at Mailbox			
Approved by: Gary R. Haynes City Engineer			
Drawn by: KLM	Date: 07/94	STD. D-18A	

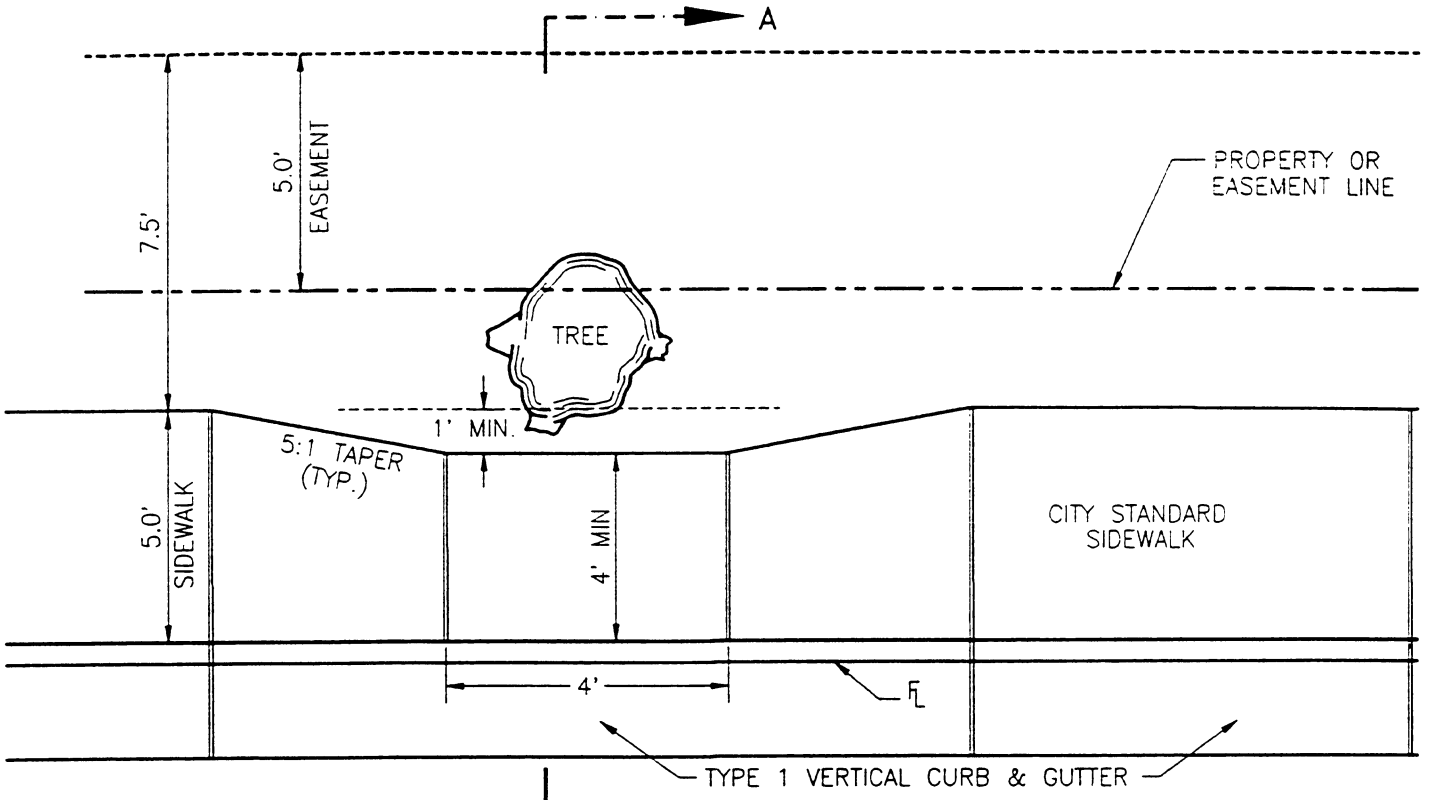

PLAN VIEW

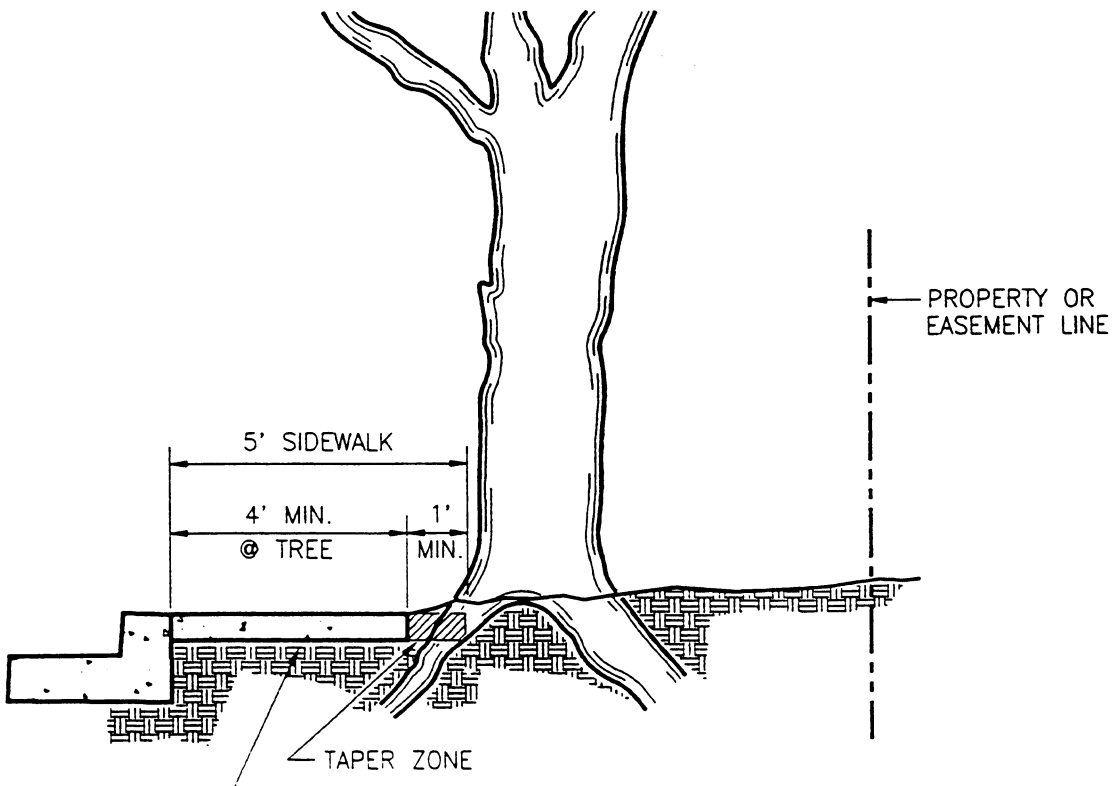

SECTION A – A

NOTE: PRIOR TO CONSTRUCTION OF NEW SIDEWALK, CLEAR & GRUB ALL ROOTS WITHIN 4" OF BOTTOM & SIDES OF NEW SIDEWALK, UNLESS DIRECTED OTHERWISE.

50' RESIDENTIAL STREET

(5' EASEMENT)
NO SCALE

CITY OF COLORADO SPRINGS	
Tree Root Protection	
Approved by:	City Forestry
Approved by:	City Engineer
Drawn by: KLM	Date: 07/94 STD. D-18B

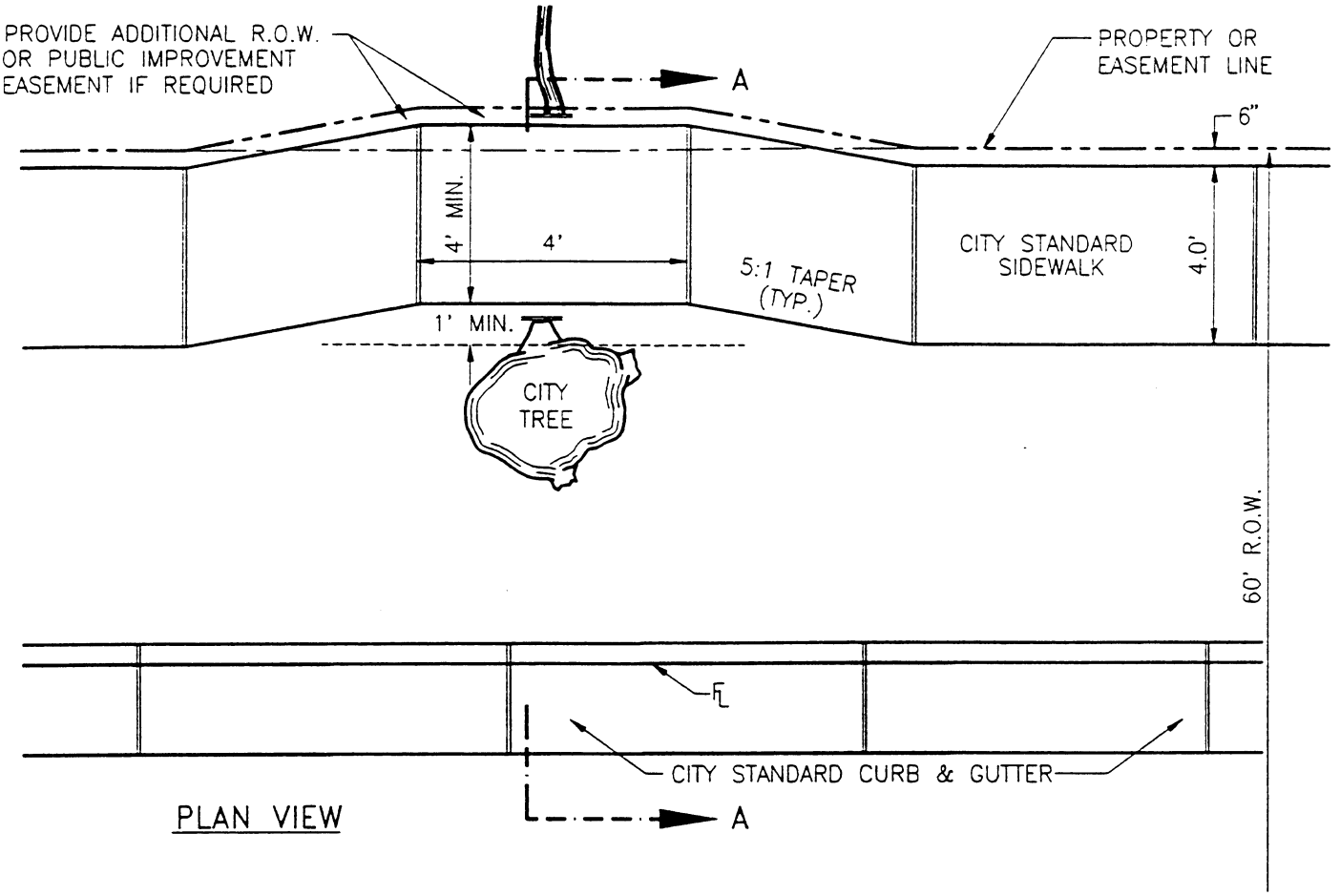

PLAN VIEW

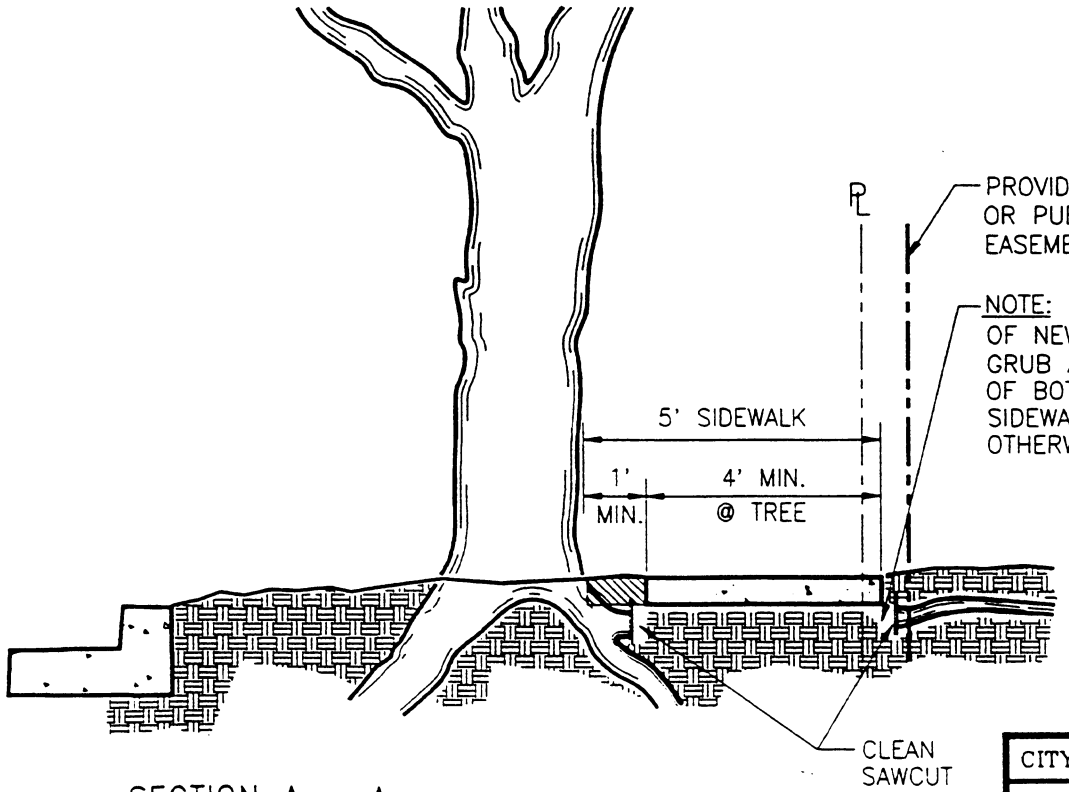

SECTION A – A

STANDARD 60' R.O.W.

NO SCALE

CITY OF COLORADO SPRINGS		
Tree Root Cuts		
Approved by:	City Forestry	
Approved by:	City Engineer	
Drawn by: KLM	Date: 07/94	STD. D-18C

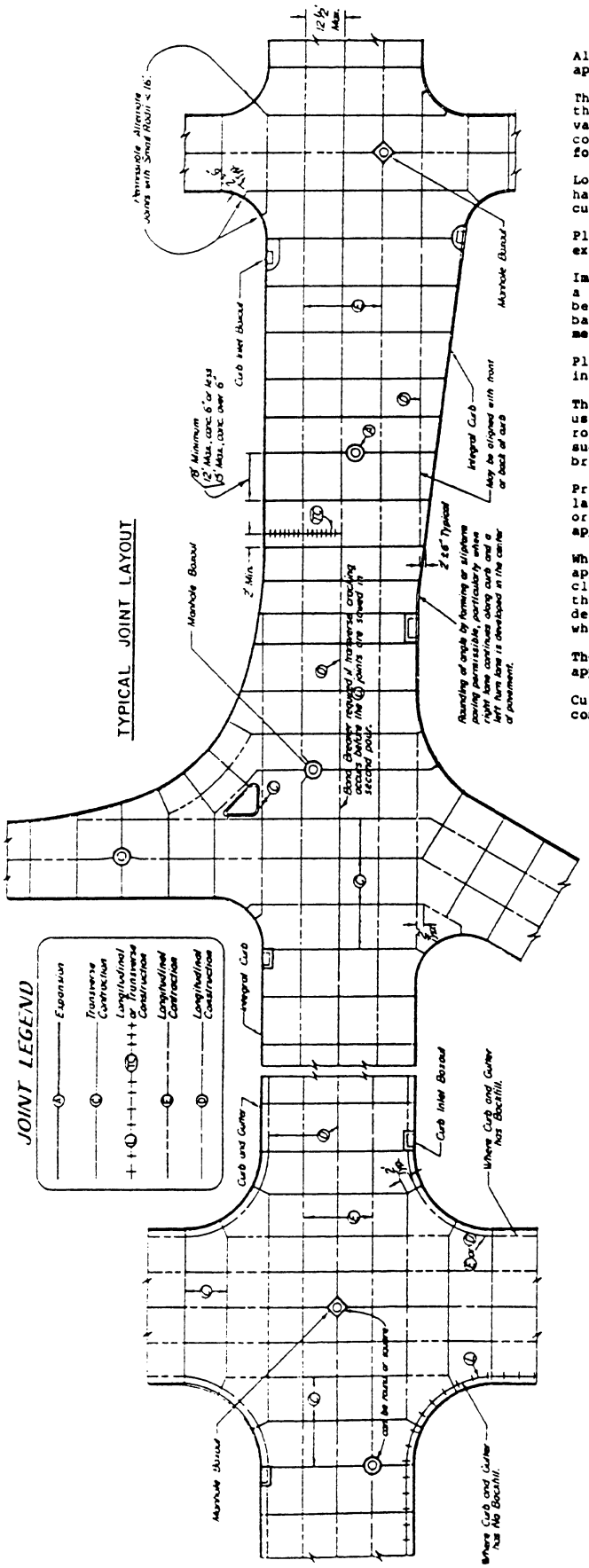

GENERAL NOTES

All work shall be done in accordance with the standard specifications applicable to the project.

The typical joint layout shown is intended to be used as a standard for the joint layout for the project. If the Contractor proposes variations from this standard, or the project has unusual or irregular conditions not covered herein, he shall prepare a pavement joint layout for the variations and unusual conditions for approval by the Engineer.

Longitudinal joints shall coincide with lane markings, if possible, and have maximum spacing of 12.5'. The longitudinal joint closest to the curb shall be tied (⊕) if there is no backfill behind the curb.

Place transverse joints perpedicular to the centerline of pavement and extend through the curb or curb and gutter.

Immediately after sawing, joints shall be cleaned of cement slurry with a pressurized water jet or other acceptable method. Joints shall also be cleaned with compressed air just ahead (100' or less) of placing backer rod and poured joint material. The Engineer may require other methods if necessary to clean joint.

Place 1/2" min. expansion joint filler in top 6 inches of curb of intersection return radius points.

The Contractor shall, unless otherwise shown on the plans, select and use either a boxout or bond breaker at catch basins, manholes and other roadway appurtenances of similar or large size. Small appurtenances, such as vlave and monument boxes, will not require a boxout or bond breaker.

Preferred transverse joint locations are: more than 5 feet from a large appurtenance with no boxout; or at the midpoint of round boxouts or appurtenances; or at the corner of rectangular boxouts or appurtenances.

Where a longitudinal joint is located one foot or more clear of an appurtenance edge, a bond breaker may be used. With 2 feet or more clearance, either a bond breaker or boxout may be used. With less than these clearances, use the "Typical 2' Radial Joint" as shown in the details. Use of square or round boxout, or bond breaker is appropriate when the appurtenance is centered on a longitudinal joint.

The final finish requirements of C.D.O.H., subsection 412.15 (f), shall apply except that transverse tined grooves will not be required.

Curb inlets may be constructed in vertical stages if it will facilitate continuous slipform paving.

CUL-DE-SAC

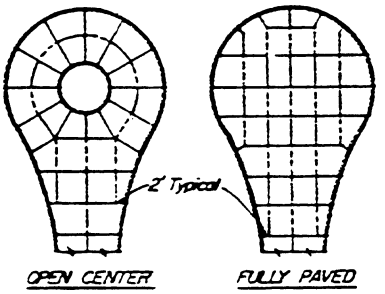

CONCRETE TO FLEXIBLE PAVEMENT TRANSITION

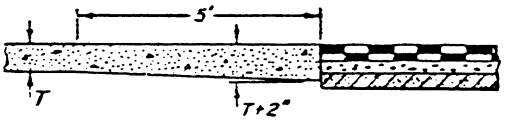

CITY OF COLORADO SPRINGS			
CONCRETE PAVEMENT – STANDARD JOINT LAYOUT			
APPROVED BY Gary R. Haynes CITY ENGINEER			
SCALE: NO SCALE	DATE: FEB.89	DRAWN: P.L.B.	SHEET D-25A 1 OF 3

Ⓐ EXPANSION JOINT

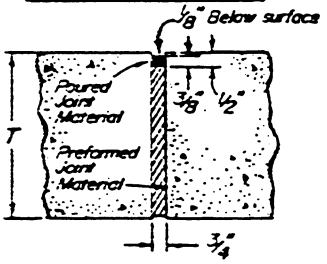

Ⓒ TRANSVERSE CONTRACTION JOINT

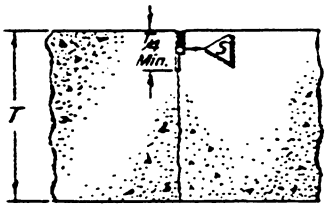

Ⓒ ALTERNATE TRANSVERSE CONTRACTION JOINT

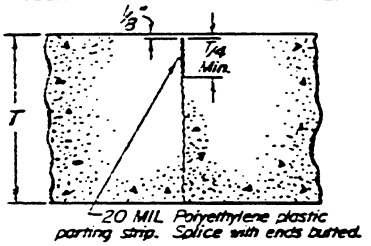

TC TRANSVERSE CONSTRUCTION JOINT

Required when pour has been interrupted more than 30 minutes and at end of a days pour.

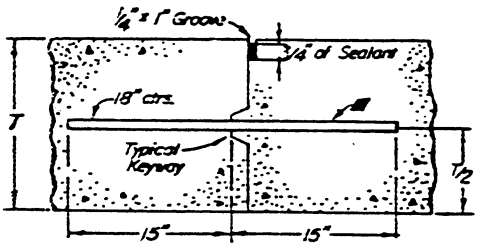

Ⓓ LONGITUDINAL CONSTRUCTION JOINT

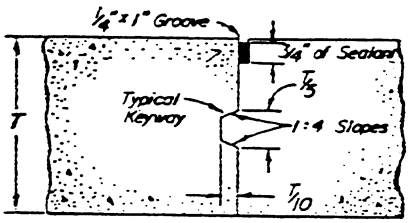

Ⓔ LONGITUDINAL CONTRACTION JOINT

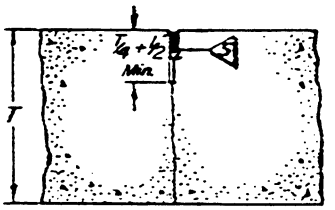

Ⓛ LONGITUDINAL CONSTRUCTION JOINT (WITH TIE BARS)

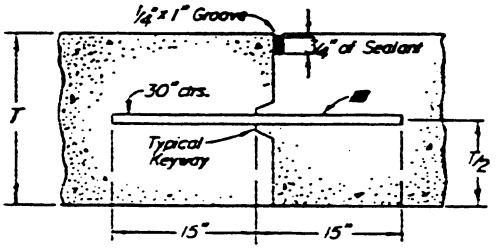

■ — Bars shall be deformed reinforcing bars. No. 4 when T ≤ 8 and No. 5 when T > 8.

SAWED JOINT

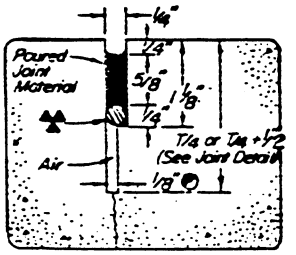

▲ Backer rod of open or closed cell polyurethane strand as approved.

◐ May be 1/4" saw cut for it's full depth with joint material and backer rod at same depth shown.

CITY OF COLORADO SPRINGS			
CONCRETE PAVEMENT – STANDARD JOINT LAYOUT			
APPROVED BY Gary R. Hayes CITY ENGINEER			
SCALE: NO SCALE	DATE: FEB. 89	DRAWN: P.L.B.	SHEET D-25B 2 OF 3

MANHOLE BOXOUT

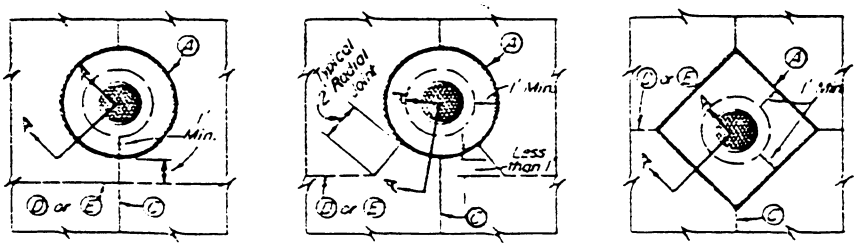

GRATED INLET BOXOUT

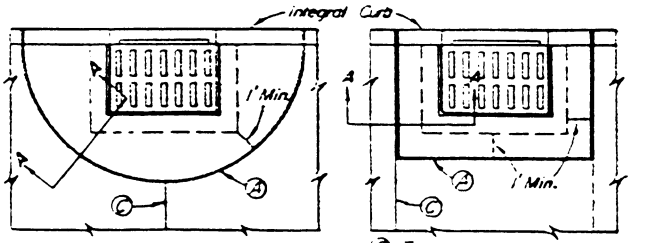

C Transverse joint at both boxout corners if boxout is 8' or longer.

BOND BREAKER

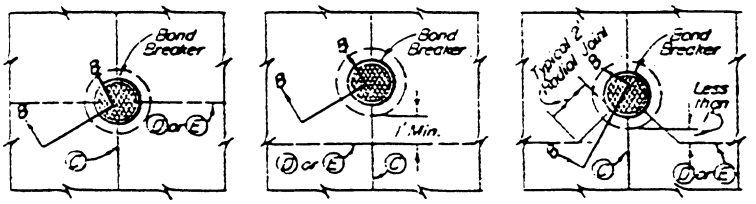

SECTION A-A

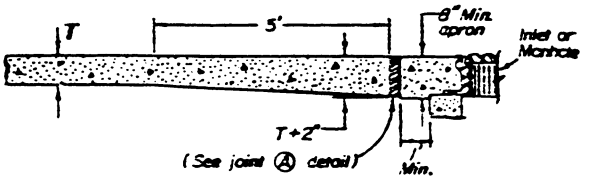

SECTION B-B

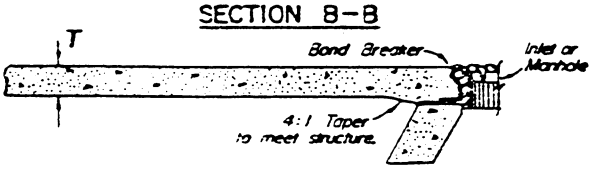

Bond Breaker shall be composed of plastic sheet, building paper or other approved material to prevent bonding.

CITY OF COLORADO SPRINGS			
CONCRETE PAVEMENT - STANDARD JOINT LAYOUT			
APPROVED BY Gary R. Haynes CITY ENGINEER			
SCALE: NO SCALE	DATE: FEB. 89	DRAWN: P.L.B.	SHEET D-25C 3 OF 3

CASE I

FOR BUS STOPS WITH DETACHED SIDEWALKS AND AN AREA BETWEEN CURB AND SIDEWALK GREATER THAN 4.5 FEET WIDE.

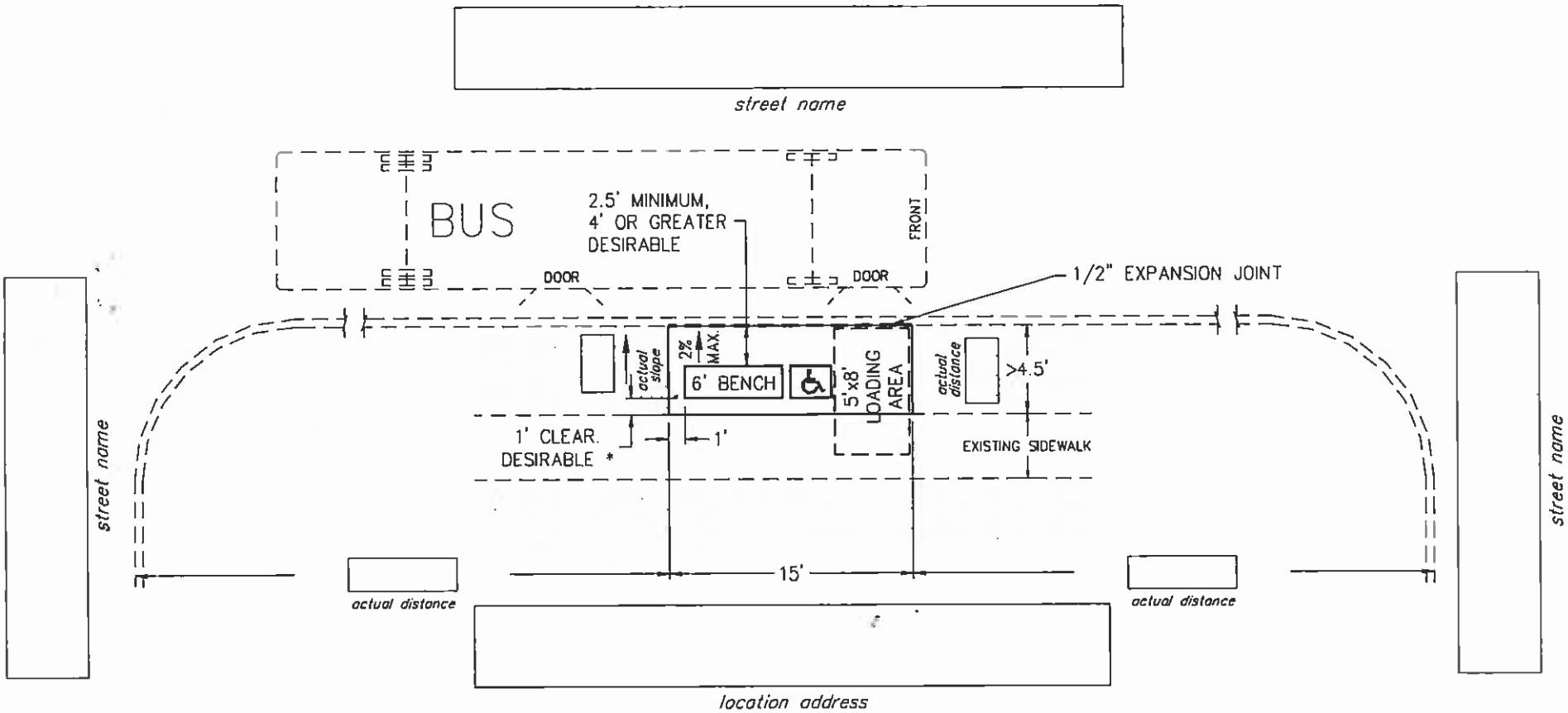

* IF EXISTING SIDEWALK IS ALSO A BIKE TRAIL, THEN A 3' CLEARANCE MUST BE PROVIDED

ALL NEW SIDEWALK AND BENCH PADS SHALL BE A MINIMUM OF 4" THICK, 4000psi CONCRETE.

BETWEEN EDGE OF SIDEWALK AND BENCH.

ALL DISTURBED AREAS SHALL BE RESTORED TO ORIGINAL OR BETTER CONDITION.

SHT. 1 OF 4
SCALE: 1"=10'

CITY OF COLORADO SPRINGS

TYPICAL BUS BENCH PLACEMENT

Approved By: _____ City Engineer

Drawn By: J. Niño | Date: 2/97 | STD D-378

CASE II

FOR BUS STOPS WITH DETACHED SIDEWALKS AND AN AREA BETWEEN CURB AND SIDEWALK LESS THAN 4.5 FEET WIDE.

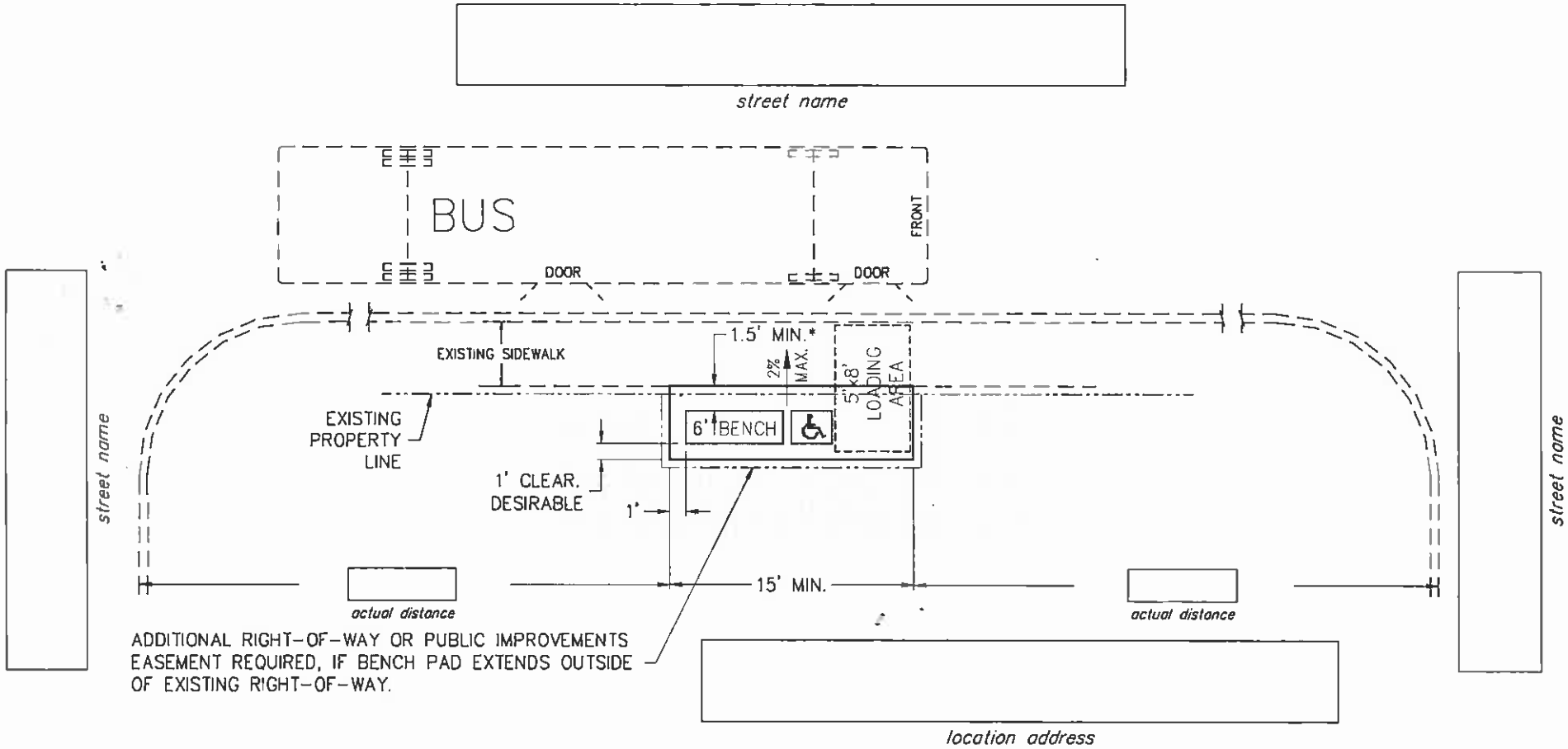

* IF EXISTING SIDEWALK IS ALSO A BIKE TRAIL, THEN A 3' CLEARANCE MUST BE PROVIDED BETWEEN EDGE OF SIDEWALK AND BENCH.

** IF COMBINED DISTANCE OF DETACHED AREA AND EXISTING SIDEWALK IS MORE THAN 8 FEET, THEN PAD LENGTH MAY BE REDUCED TO 10 FEET.

ALL NEW SIDEWALK AND BENCH PADS SHALL BE A MINIMUM OF 4" THICK, 4000psi CONCRETE.

ALL DISTURBED AREAS SHALL BE RESTORED TO ORIGINAL OR BETTER CONDITION.

SHT. 1 OF 4
SCALE: 1"=10'

CITY OF COLORADO SPRINGS

TYPICAL BUS BENCH PLACEMENT

Approved By: _____ City Engineer

Drawn By: J. Niño | Date: 2/97 | STD. D-37B

CASE IV

FOR BUS STOPS WITH ATTACHED SIDEWALKS MORE THAN 10.5 FEET WIDE.

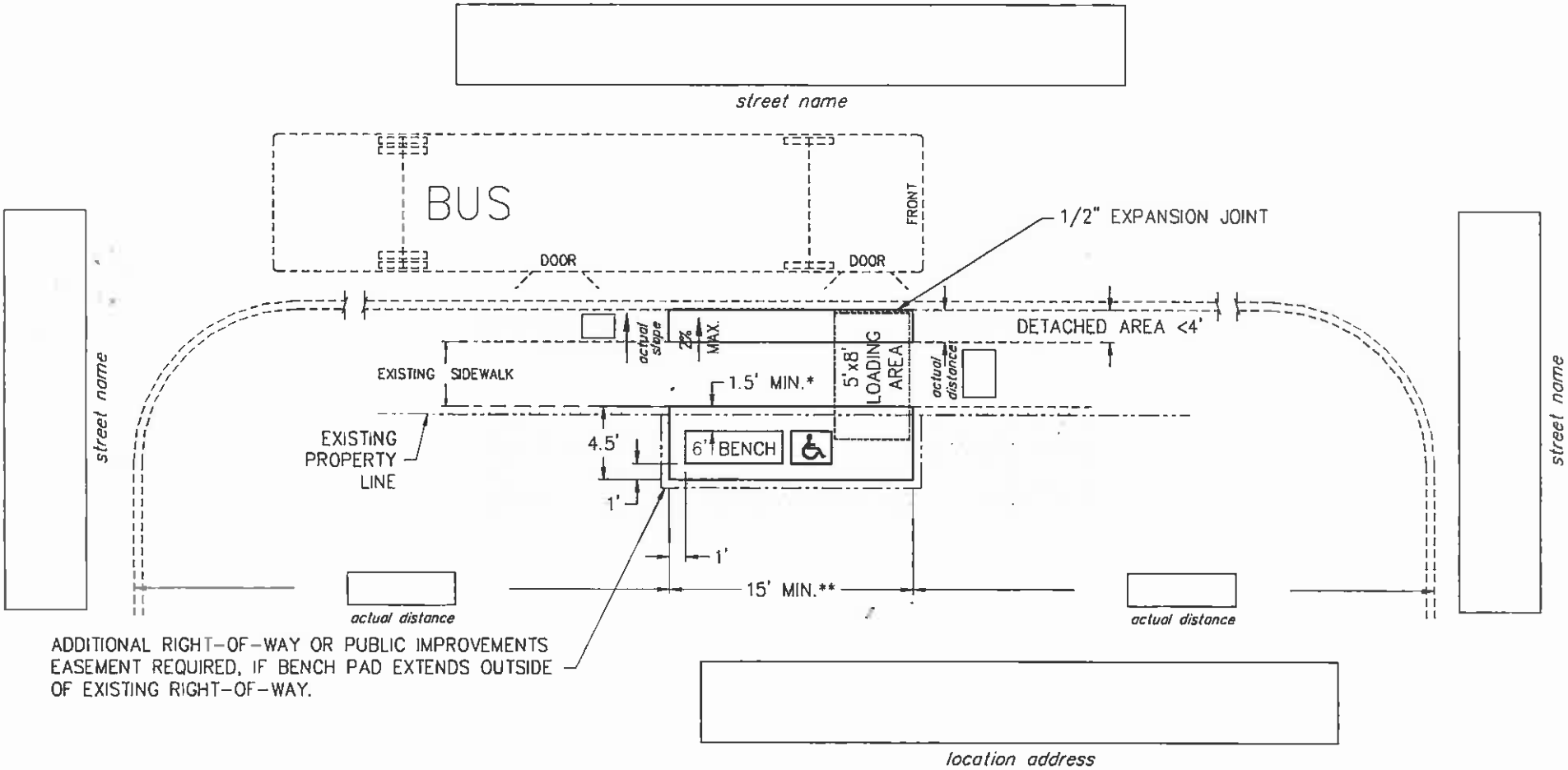

ADDITIONAL RIGHT-OF-WAY OR PUBLIC IMPROVEMENTS EASEMENT REQUIRED, IF BENCH PAD EXTENDS OUTSIDE OF EXISTING RIGHT-OF-WAY.

* PROVIDED THAT THE SIDEWALK IS NOT ALSO A BIKE LANE OR TRAIL, IN WHICH CASE THE SIDEWALK MAY NOT BE OBSTRUCTED AND THE BENCH WILL NEED TO BE LOCATED BEHIND THE BACK OF SIDEWALK AS IN "CASE III", WITH A 10 FOOT MINIMUM PAD LENGTH.

ALL NEW SIDEWALK AND BENCH PADS SHALL BE A MINIMUM OF 4" THICK, 4000psi CONCRETE.

ALL DISTURBED AREAS SHALL BE RESTORED TO ORIGINAL OR BETTER CONDITION.

SHT. 4 OF 4
SCALE 1"=10'

CITY OF COLORADO SPRINGS

TYPICAL BUS BENCH PLACEMENT

Approved By: _____ City Engineer

Drawn By: J. Niño | Date: 2/97 | STD. D-37B

CASE V

FOR BUS STOPS WITH DETACHED SIDEWALKS
AND AN AREA BETWEEN THE CURB AND SIDEWALK
IS GREATER THAN 4.0 FEET WIDE.

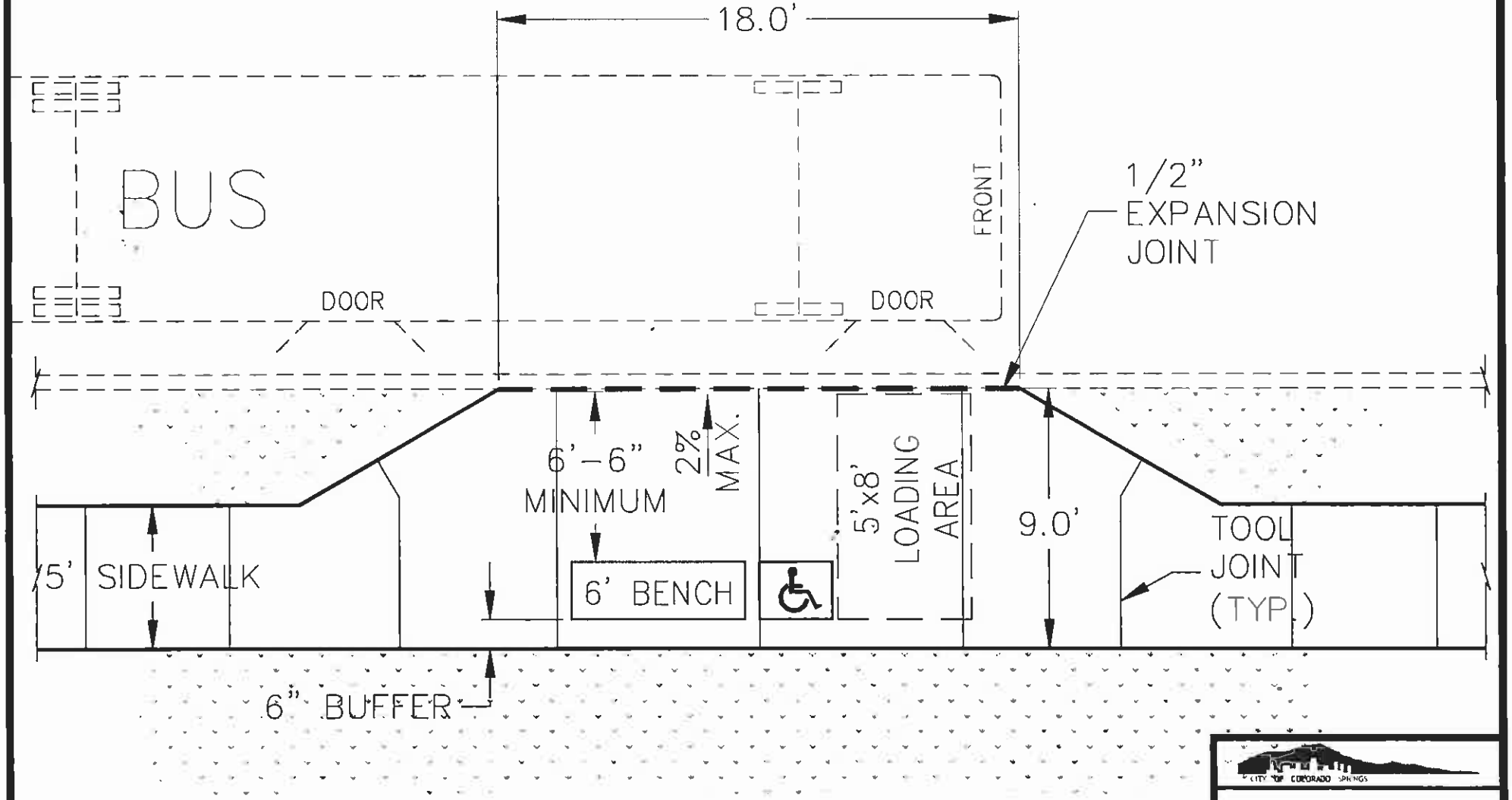

ALL NEW SIDEWALK AND BENCH PADS SHALL BE A MINIMUM OF 4" THICK, 4000PSI CONCRETE.

ALL DISTURBED AREAS SHALL BE RESTORED TO ORIGINAL OR BETTER THAN CONDITION.

CITY OF COLORADO SPRINGS

TYPICAL BUS BENCH PLACEMENT

Approved By: _____ City/Project Engineer

Drawn By: J. Niño | Date: Dec., 2003 | STD. D-37E

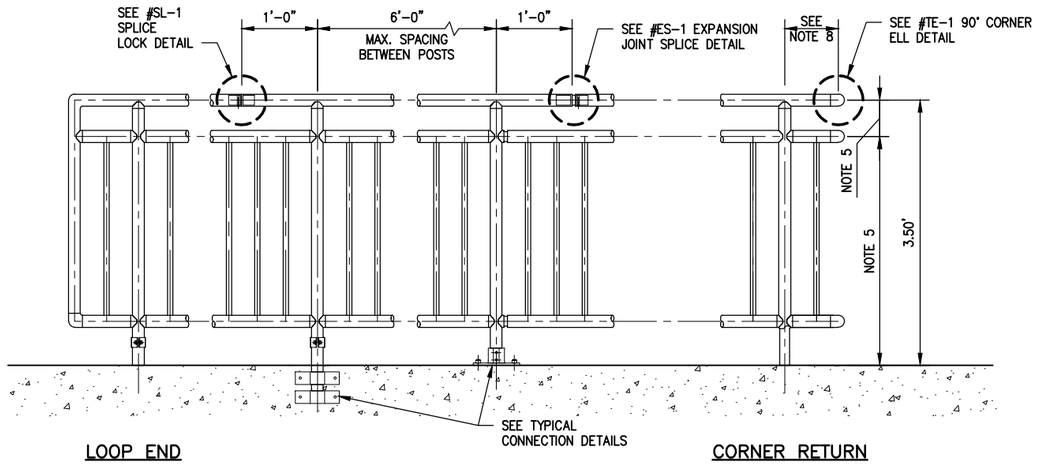

LOOP END

CORNER RETURN

TYPICAL HANDRAIL

(HANDRAILS SHALL BE TOP MOUNTED OR SIDE MOUNTED, AS SHOWN ON PLANS)

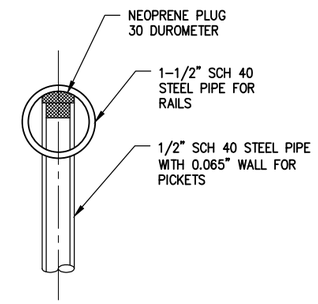

PICKET TO RAIL CONNECTION

NOTES:

1. HANDRAILS SHALL BE THE PRODUCT OF A COMPANY NORMALLY ENGAGED IN THE MANUFACTURE OF PIPE RAILING. RAILING SHALL BE SHOP ASSEMBLED IN LENGTHS NOT TO EXCEED 24 FEET FOR FIELD ERECTION.
2. THE HANDRAIL SHALL BE MADE OF PIPES JOINED TOGETHER WITH COMPONENT FITTINGS. SAMPLES OF ALL COMPONENTS, BASES, TOE PLATE AND PIPE SHALL BE SUBMITTED FOR APPROVAL AT THE REQUEST OF THE ENGINEER. COMPONENTS THAT ARE POP-RIVETED OR GLUED AT THE JOINTS WILL NOT BE ACCEPTABLE. ALL COMPONENTS MUST BE MECHANICALLY FASTENED WITH STAINLESS STEEL HARDWARE. HANDRAIL AND COMPONENTS SHALL BE TUFRAIL, AS MANUFACTURED BY THOMPSON FABRICATING, LLC (BIRMINGHAM, ALABAMA) OR AN APPROVED EQUAL..
3. PIPE RAILS AND POSTS SHALL BE IN ACCORDANCE WITH ASTM A53 GRADE B FOR STANDARD WEIGHT PIPE. POSTS AND END RAILS SHALL BE FABRICATED AND INSTALLED PLUMB ± 1" TOLERANCE WHEN MEASURED AT 3'-6" ABOVE THE FOUNDATION. CORNERS AND CHANGES IN TANGENTIAL LONGITUDINAL ALIGNMENT, MAY BE MADE CONTINUOUS WITH A 9" BEND RADIUS OR TERMINATED AT ADJOINING SECTIONS WITH A STANDARD END HOOP WHEN HANDRAILS ARE NOT REQUIRED. FOR CHANGES IN TANGENTIAL LONGITUDINAL ALIGNMENT GREATER THAN 45°, POSTS SHALL BE POSITIONED AT A MAXIMUM DISTANCE OF 2'-0" EACH SIDE OF THE CORNER AND SHALL NOT BE LOCATED AT THE CORNER APEX. FOR CURVED LONGITUDINAL ALIGNMENTS THE TOP AND BOTTOM RAILS AND HANDRAILS SHALL BE SHOP BENT TO MATCH THE ALIGNMENT RADIUS.
4. HANDRAILS SHALL BE DESIGNED TO WITHSTAND A 200 IB. CONCENTRATED LOAD APPLIED IN ANY DIRECTION AND AT ANY POINT ON THE TOP RAIL. HANDRAILS SHALL ALSO BE DESIGNED TO WITHSTAND A UNIFORM LOAD OF 50 LB/FT APPLIED HORIZONTALLY TO THE TOP RAIL. UNIFORM LOADS ARE NOT TO BE APPLIED SIMULTANEOUSLY WITH THE CONCENTRATED LOADS.
5. PICKETS AND INTERMEDIATE RAILINGS SHALL BE PROVIDED SUCH THAT A 4-INCH DIAMETER SPHERE CANNOT PASS THROUGH ANY OPENING UP TO A HEIGHT OF 34 INCHES. FROM A HEIGHT OF 34 INCHES TO 42 INCHES ABOVE THE ADJACENT WALKING SURFACE, A SPHERE 8 INCHES IN DIAMETER SHALL NOT PASS. THE TRIANGULAR OPENINGS FORMED BY THE RISER, TREAD AND BOTTOM RAIL AT THE OPEN SIDE OF A STAIRWAY SHALL BE OF A SIZE SUCH THAT A SPHERE OF 6 INCHES IN DIAMETER CANNOT PASS THROUGH THE OPENING.
6. PICKETS AND INTERMEDIATE RAILINGS SHALL BE DESIGNED TO WITHSTAND A HORIZONTALLY APPLIED NORMAL LOAD OF 50 LB ON AN AREA NOT TO EXCEED ONE SQUARE FOOT INCLUDING OPENINGS AND SPACE BETWEEN RAILS.
7. POSTS SHALL NOT INTERRUPT THE CONTINUATION OF THE TOP RAIL AT ANY POINT ALONG THE RAILING, INCLUDING CORNERS AND END TERMINATION (OSHA 1910.23). THE TOP SURFACE OF THE TOP RAILING SHALL BE SMOOTH AND SHALL NOT BE INTERRUPTED BY PROJECTED FITTINGS.
8. THE MID-RAIL AT A CORNER RETURN SHALL BE ABLE TO WITHSTAND A 200 LB LOAD WITHOUT LOOSENING. THE MANUFACTURER IS TO DETERMINE THIS DIMENSION FOR THEIR SYSTEM AND PROVIDE PHYSICAL LABORATORY TESTS TO CONFIRM COMPLIANCE.
9. CONCRETE ANCHORS SHALL BE STAINLESS STEEL TYPE 303 OR 304 WEDGE ANCHORS AND SHALL BE FURNISHED BY THE HANDRAIL MANUFACTURER. THE ANCHOR DESIGN SHALL INCLUDE THE APPROPRIATE REDUCTION FACTORS FOR SPACING AND EDGE DISTANCES IN ACCORDANCE WITH THE MANUFACTURER'S PUBLISHED DATA.
10. OPENINGS IN THE RAILING SHALL BE GUARDED BY A SELF-CLOSING GATE (OSHA 1910.23). SAFETY CHAINS SHALL NOT BE USED UNLESS SPECIFICALLY SHOWN ON THE DRAWINGS.

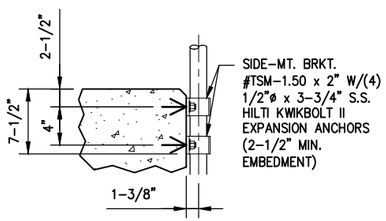

TYPICAL SIDE MOUNT CONNECTION TO CONCRETE WALL

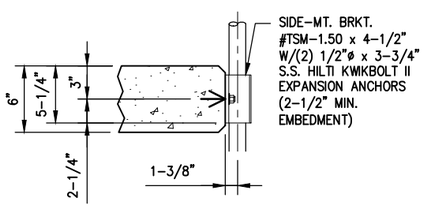

TYPICAL SIDE MOUNT CONNECTION TO 6" CONCRETE SLAB

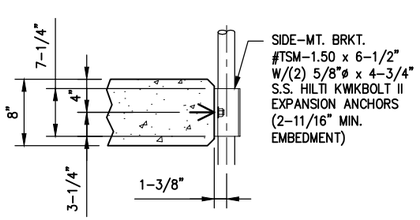

TYPICAL SIDE MOUNT CONNECTION TO 8" CONCRETE SLAB

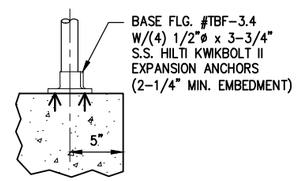

TYPICAL TOP MOUNT CONNECTION TO CONCRETE WALL

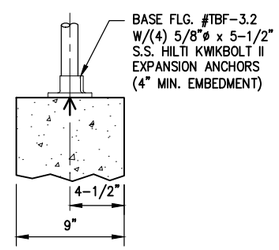

TYPICAL TOP MOUNT CONNECTION TO 9" CONCRETE WALL

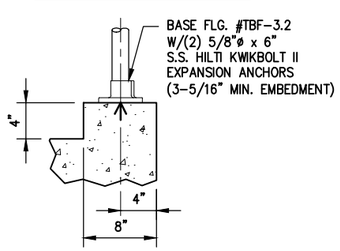

TYPICAL TOP MOUNT CONNECTION TO 4" x 8" CONCRETE WALL

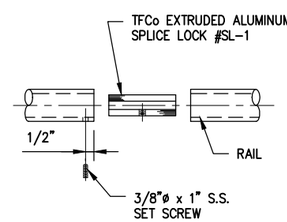

#SL-1 SPLICE LOCK

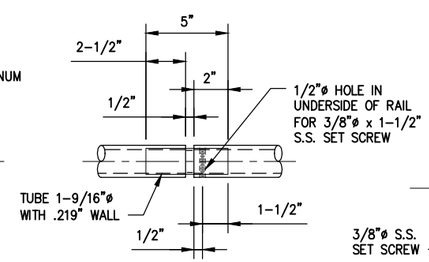

#ES-1 EXPANSION SPLICE

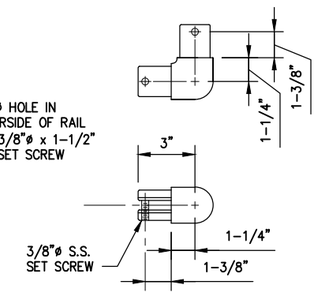

#TE-1 90° CORNER ELL

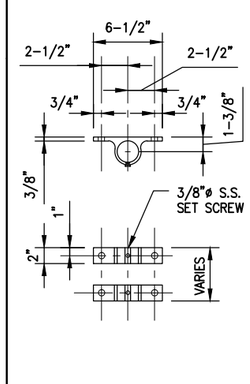

#TSM-1.50 SIDE MT. BRACKET (2 PIECE)

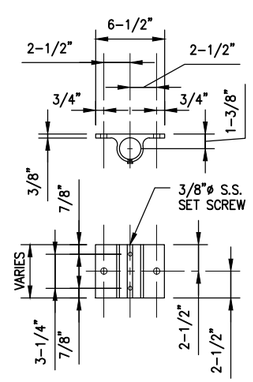

#TSM-1.50 SIDE MT. BRACKET (1 PIECE)

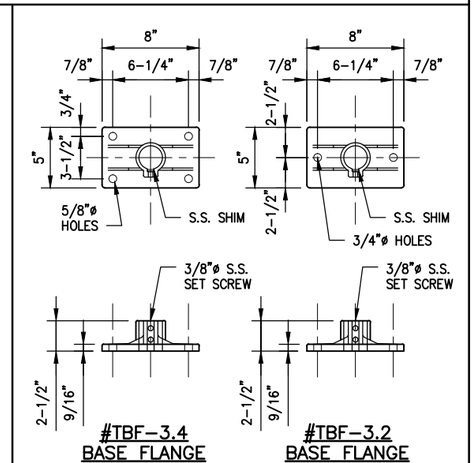

#TBF-3.4 BASE FLANGE

#TBF-3.2 BASE FLANGE

CITY OF COLORADO SPRINGS

PUBLIC WORKS / CITY ENGINEERING

TYPICAL HANDRAIL

DATE: 01/06/2016

STD. DRAWING NO. D-##